Request for Proposals

General Contractor Services

Federal Way Headquarters Distribution Floor Office Remodel

Multi-Service Center
1200 S. 336th St.
Federal Way, WA 98003

1 Project overview

Multi-Service Center (MSC) invites qualified general contractors to submit proposals to convert the former food bank distribution floor at its Federal Way headquarters into office and support spaces, including open and private offices, a clothing closet, storage, an IT room, and a break area. Coordinate construction to maintain safe access and minimize disruption to ongoing MSC operations.

MSC is a nonprofit serving South King County. Its mission is to uplift communities by increasing equitable access to advocacy, opportunities, and wellbeing. MSC provides economic opportunity, energy assistance, food assistance, affordable housing, and long-term care ombudsman services.

2 Procurement schedule and contact

Proposed start date — Summer 2027
Proposed end date — November 2027

Milestone	Date and time
RFP release	11/20/2026
Site visit and drawing access	11/30/2026 -12/11/2026
Deadline for vendor questions	12/14/2026
MSC responses to questions	12/23/2026
Proposal deadline	1/11/2026

Submit questions and proposals by email to operations@mschelps.org. Use the subject line “Federal Way Headquarters GC RFP” and include the proposing firm’s name. MSC will email responses to vendors and post them on its website.

This is an open and competitive procurement. The RFP and the successful proposal may be incorporated into the final contract. Work may begin only after both parties sign the contract and MSC issues a Notice to Proceed.

3 Scope of work

Provide labor, materials, equipment, supervision, permits, protection, coordination. regular OAC meetings, testing, and closeout for the office remodel within the areas shown in the project drawings. Verify existing conditions and all dimensions and quantities before submitting a lump sum proposal.

Demolition and masonry

- Remove the existing walk-in freezer or cooler, kitchen equipment, suspended ceiling system, and selected doors, frames, walls, ceilings, flooring, and finishes as indicated on the drawings. Make affected utilities safe before beginning demolition. Protect existing systems and finishes designated to remain throughout demolition.
- Remove existing exterior doors as shown on plans. Infill with wall, new door, or window as shown.
- Demo existing wall in order to install new windows, as shown on plans.
- Remove existing mechanical, plumbing and electrical no longer in use or as required to install new systems.
- The estimate identifies approximately 940 square feet of wall demolition, nine doors, seven frames, 56 linear feet of sawcutting, and 48 square feet of CMU removal. Verify limits against drawings and field conditions.
- Include a $2,000 allowance for CMU wall infills in the base proposal. Identify allowance inclusions, markup, and adjustment procedure; do not add the allowance twice. Include loading, disposal, and cleanup.

Partitions, doors, windows, and casework

- Construct new wood-framed partitions, soffits, and wall infills, with sheathing and sound batts where indicated. Include new drywall at walls and affected ceilings, patching, and preparation for finishes.
- Provide doors, frames, hardware, sidelites, relites, and windows shown on the drawings, including required flashing, sealants, and weather-resistive barrier repairs at exterior openings.
- Provide acoustical ceiling tiles per the drawings.
- Provide clear prefinished hemlock trim at doors, windows, and relites to match trim provided at the lobby remodel.
- Provide approximately 18 linear feet each of base and upper cabinets, 18 linear feet of postformed plastic laminate countertop, and 36 linear feet of shelving with brackets. Verify dimensions and configuration.

- Exterior work –

Where exterior walls are infilled, repair and paint to match existing Interior finishes

- Provide approximately 1,515 square feet of acoustical ceiling grid and tile.
- Prepare approximately 1,662 square feet of flooring and install luxury vinyl plank flooring with approximately 482 linear feet of rubber base.
- Paint new and affected surfaces, including approximately 4,820 square feet of walls and affected ceiling areas. Confirm final finish selections with MSC and the Architect.
- Where the work affects existing spaces outside of the scope of the project, walls, floors, ceiling, and finishes to be patched to match existing.

Appliances
Provide and install appliances as shown in drawings.

Mechanical and plumbing

Include plumbing modifications shown on the drawings and associated with the break area and equipment removals. Include HVAC ductwork modifications, return duct smoke detection, and dedicated cooling for the server or IT room. Coordinate equipment loads, controls, condensate handling, penetrations, and electrical connections across trades. Identify equipment selections and any design assumptions.

Quantities listed in this section are estimate references for bid coordination. Bidders remain responsible for takeoffs and identifying discrepancies before the proposal deadline.

Electrical and lighting

- Provide an 80-amp 120/208-volt panel near the IT closet and a 30-amp HVAC circuit to the IT closet from the generator panel, subject to verification of capacity and design requirements.
- Provide 44 standard outlets, four GFCI outlets, and eight occupancy sensors or switches at the locations shown on the coordinated plans.
- Provide two pendant lights, 19 linear pendant lights, and four two-foot undercabinet lights. Reference fixture families are TGS Orbit, Stria 3 Pendant, and Himmel; confirm final fixture schedules, dimensions, output, finish, and controls with the Architect.
- Include electrical permits and coordinate all power connections, raceways, penetrations, and system commissioning. Identify any electrical engineering services required separately.

Data and communications

Include 19 two-port data locations with Category 6 connectivity, a four-post rack in the IT room, and a 12-strand OS2 fiber interconnection to L4, subject to confirmation of the route and termination location. Retain the existing rack in the break room. Include patch panels, cable management, fiber termination hardware, labeling, final connections, and testing. Reconcile the listed two-port locations with the final plate and port schedule before procurement.

Coordinate the complete conduit and pathway scope between electrical and low-voltage subcontractors. Confirm owner markups and referenced email instructions are included in the issued bid documents. Identify responsibility for network equipment and migration and describe any anticipated outages.

Fire alarm and life safety

Include fire alarm modifications, remodel-area notification devices, and a duct detector assembly with relay module, sampling tube, and remote test station. The reference quote lists five ceiling horn strobes and one ceiling strobe. Include permits, final connections, and testing. Removal of existing smoke detection is subject to approved design and authority requirements. Identify any existing sprinklers that would need relocation or additional life safety work required.

Occupied site and completion

Provide temporary protection, dust and noise controls, barricades, safe access, debris removal, cleanup, and coordination with MSC. Notify MSC and the Architect of unforeseen conditions and obtain written authorization for changes. Complete inspections, punch list work, training, and turnover of warranties, record information, and test reports.

4 Contractor requirements

Business qualifications

- Be licensed to do business in Washington State and hold required contractor registrations. Have at least three years in business under the same name or ownership group.
- Maintain industrial insurance coverage for employees working in Washington, an Employment Security Department number, and a state excise tax registration number.
- Not appear on state or federal debarment lists. Be current with payments to the IRS and the Washington State Departments of Labor & Industries, Revenue, and Employment Security.

Insurance and bonding

Coverage	Minimum requirement
Commercial general liability	$1,000,000 per occurrence; $2,000,000 aggregate
Automobile liability	$1,000,000 combined single limit per accident
Employer liability and Washington stop gap	$1,000,000 per accident
Builder's risk	100 percent replacement cost value
Professional liability errors and omissions	$1,000,000 per claim and aggregate
Payment bond	100 percent of the contract price

Name MSC as an additional insured for general liability during ongoing and completed operations. Coverage must be primary and noncontributory. Provide the required waiver of subrogation in favor of MSC. Coverage requirements apply equally to subcontractors. Disclose any exceptions with the proposal; final insurance and bond terms will be established in the contract.

Permits and inspections

Obtain permits required for the work and coordinate required inspections and approvals. The funder reserves the right to conduct onsite inspections at any time. Include inspection milestones in the proposed schedule.

Compliance and equal opportunity

Perform the work in compliance with applicable federal, state, and City of Federal Way laws, codes, ordinances, standards, and funding requirements. Comply with applicable lead-based paint, clean air, water pollution control, environmental protection, accessibility, nondiscrimination, fair housing, and affirmative action requirements.

Provide equal employment opportunity without regard to sex, race, color, marital status, national origin, religion, disability, sexual orientation, gender identity or expression, or age. These obligations apply to recruitment, hiring, training, compensation, promotion, transfer, layoff, and termination. Mandatory compliance obligations and remedies will be incorporated into the contract.

Payment and administration

- Payment will be made for work performed; advance payment is not permitted. Materials delivered onsite may be invoiced before installation.
- Submit invoices no more than one time per week, with supporting documentation required by the contract MSC financial policies
- Include all applicable taxes in the proposal. Identify any excluded fees or charges and explain them fully.
- Do not begin work before contract execution and MSC's Notice to Proceed.

5 Proposal contents

Organize the proposal in the order below. Provide a table of contents and a cover letter signed by an authorized representative, including the firm's legal name, address, primary contact, phone number, and email address.

Qualifications and organizational capacity

- Acknowledge review of all contractor requirements and identify each exception, concern, or requested clarification.

- Describe comparable commercial construction projects, including occupied facilities, government-funded work. Provide relevant project references.
- Describe the organization, years in business, geographic service area, staffing, customer base, annual gross revenues, and capacity to complete this project.
- Identify the proposed project manager, superintendent, key staff, and anticipated subcontractors. Describe responsibilities and include resumes of key personnel.

Approach and schedule

Provide the construction duration independently; this is a planning assumption rather than a required completion period.

- Describe the construction approach, sequencing, site protection, coordination with MSC and the Architect, and coordination of building systems work.
- Provide a schedule with permitting, procurement, mobilization, construction phases, inspections, substantial completion, punch list, and closeout milestones. Identify long-lead items and assumptions.
- Explain how the team will maintain MSC operations, manage changes, and communicate progress and disruptions.

6 Cost proposal

Provide a complete, itemized price for the scope of work. Include labor, materials, subcontractors, permits, taxes, overhead, profit, insurance, and bonding. Avoid double counting costs included in subcontractor pricing. Separate any proposed alternates from the base proposal.

Cost category	Amount
Demolition masonry and CMU infill allowance	$
Framing insulation drywall and finish carpentry	$
Doors frames hardware windows and relites	$
Casework countertops and shelving	$
Ceilings flooring base and painting	$
Plumbing HVAC and server room cooling	$
Electrical lighting and controls	$
Data fiber rack and low-voltage pathways	$
Fire alarm modifications and testing	$
Temporary protection site logistics and cleanup	$
Other direct labor materials and subcontractors	$
Fees and permits	$
General conditions	$

Cost category	Amount
GC overhead and profit	$
Bonds insurance and B&O tax	$
Subtotal before sales tax	$
Sales tax — identify rate and taxable basis	$
Total base proposal including sales tax	$

Provide a supporting breakdown identifying labor, materials, and subcontractor costs by trade or work element. Explain allowances, contingencies, exclusions, assumptions, and pricing validity. List alternate prices and any proposed unit rates separately. Identify the tax assumptions used.

7 Pricing qualifications and scope reconciliation

The reference contractor and subcontractor estimates contain exclusions that must be resolved for a complete proposal. State who will provide each item below and show its price or allowance separately when it is not included in the base proposal:

- Architectural, structural, civil, and electrical engineering or design services.
- Design review and ordinance fees; building permit fee; trade permits; utility connection fees, if required.
- Washington State sales tax, builder's risk insurance, payment bond costs, testing and inspections, and construction contingency.
- Hazardous material surveys, handling, and removal. Identify required investigation and notification procedures before disturbing suspect materials.
- Any additional equipment or work required by reviewing authorities beyond the reference quotes.

Include sales tax in the total bid and show the tax rate and basis separately. Provide required builder's risk and bonding costs rather than carrying forward exclusions from reference estimates.

Identify material escalation or tariff assumptions, quote validity, lead times, and proposed price adjustment terms. Do not incorporate subcontractor payment, acceptance, or owner insurance terms without expressly listing them as exceptions for MSC review.

Submit a scope reconciliation identifying differences between drawings, owner markups, takeoffs, allowances, and subcontractor quotes. Include complete conduit, permitting, testing, and final connections across electrical, data, and fire alarm trades. Confirm the generator connection and available capacity before committing to the electrical design.

8 Review and selection

MSC will review proposals for responsiveness, relevant experience, team capacity, construction approach, ability to maintain operations, proposed schedule, and overall cost and value. MSC may request clarifications, conduct interviews, and check references before selecting a contractor and negotiating a contract.

Any exceptions to the RFP must be stated clearly in the proposal. Submission does not authorize work or guarantee award. Final scope, schedule, pricing, insurance, bonding, and funding requirements will be established in the executed contract.

9 Submission checklist

Include responses to Section 5, resumes of key staff, relevant project references, the cost proposal in Section 6, and acknowledgement of contractor requirements, the scope reconciliation required by Section 7, and a complete list of assumptions and exceptions.

Email the complete proposal to operations@mschelps.org by the deadline in Section 2.

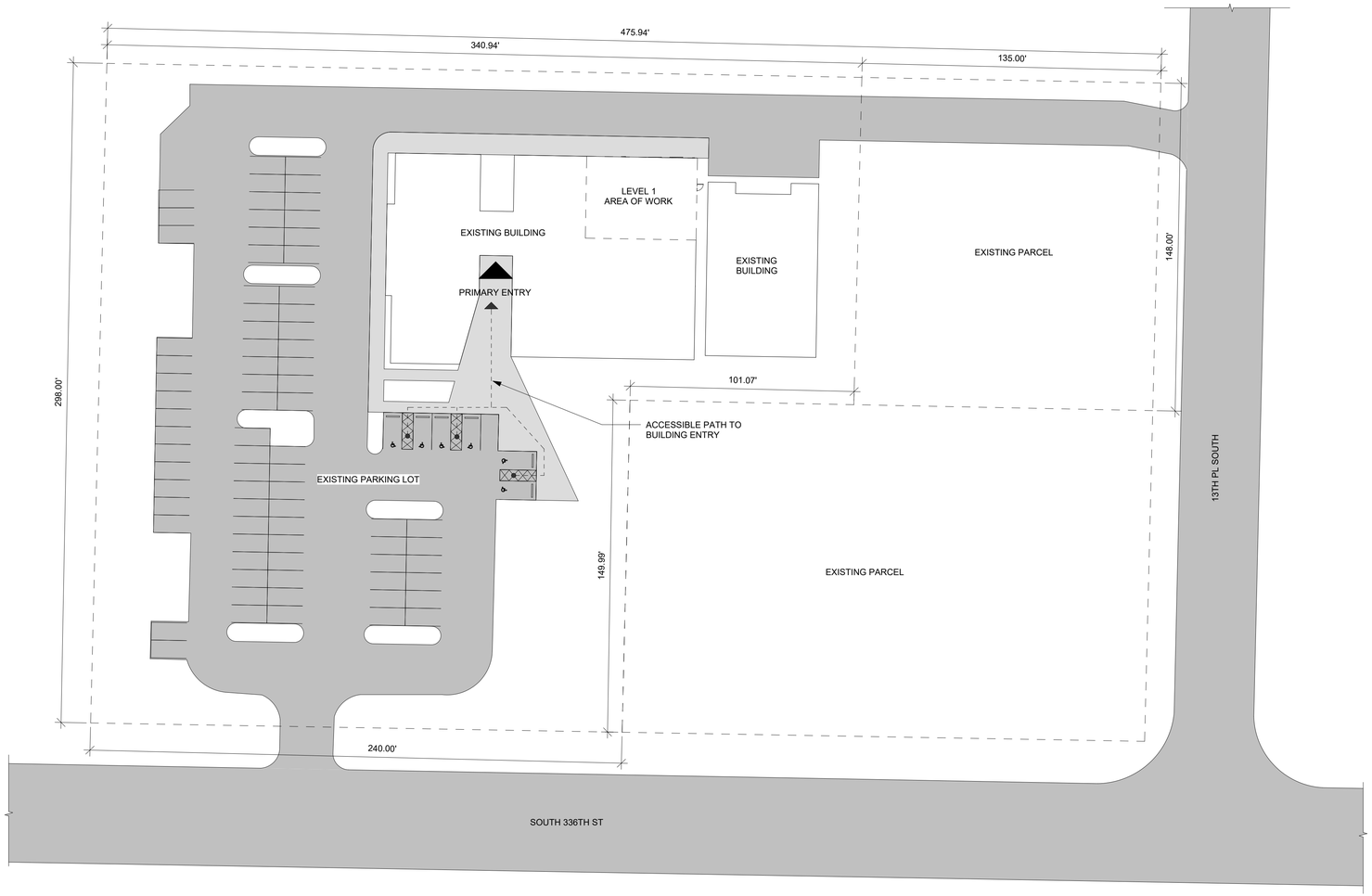

1 (E) SITE PLAN

SCALE: 1" = 30'-0"

0 15' 30' 60'

GENERAL NOTES

1. -

SMR Architects
117 S. Main St., Suite 400
Seattle, WA 98104

PH: 206.623.1104
FX: 206.623.5285

MULTI-SERVICE CENTER OFFICE & CLOTHING CLOSET

1200 SOUTH 336TH STREET
FEDERAL WAY, WA 98003

NOT FOR CONSTRUCTION

ISSUED SETS

DATE	DESCRIPTION
09/25/06	COST ESTIMATE

REVISIONS / NOTES

NO	DATE	DESCRIPTION

AHJ STAMP

TITLE

SITE PLAN

PERMIT #	
DRAWN	EK
CHECKED	KS
ISSUE DATE	09/25/2026
PROJECT #	24056
SHEET #	

A001

9/24/2026 4:23:21 PM

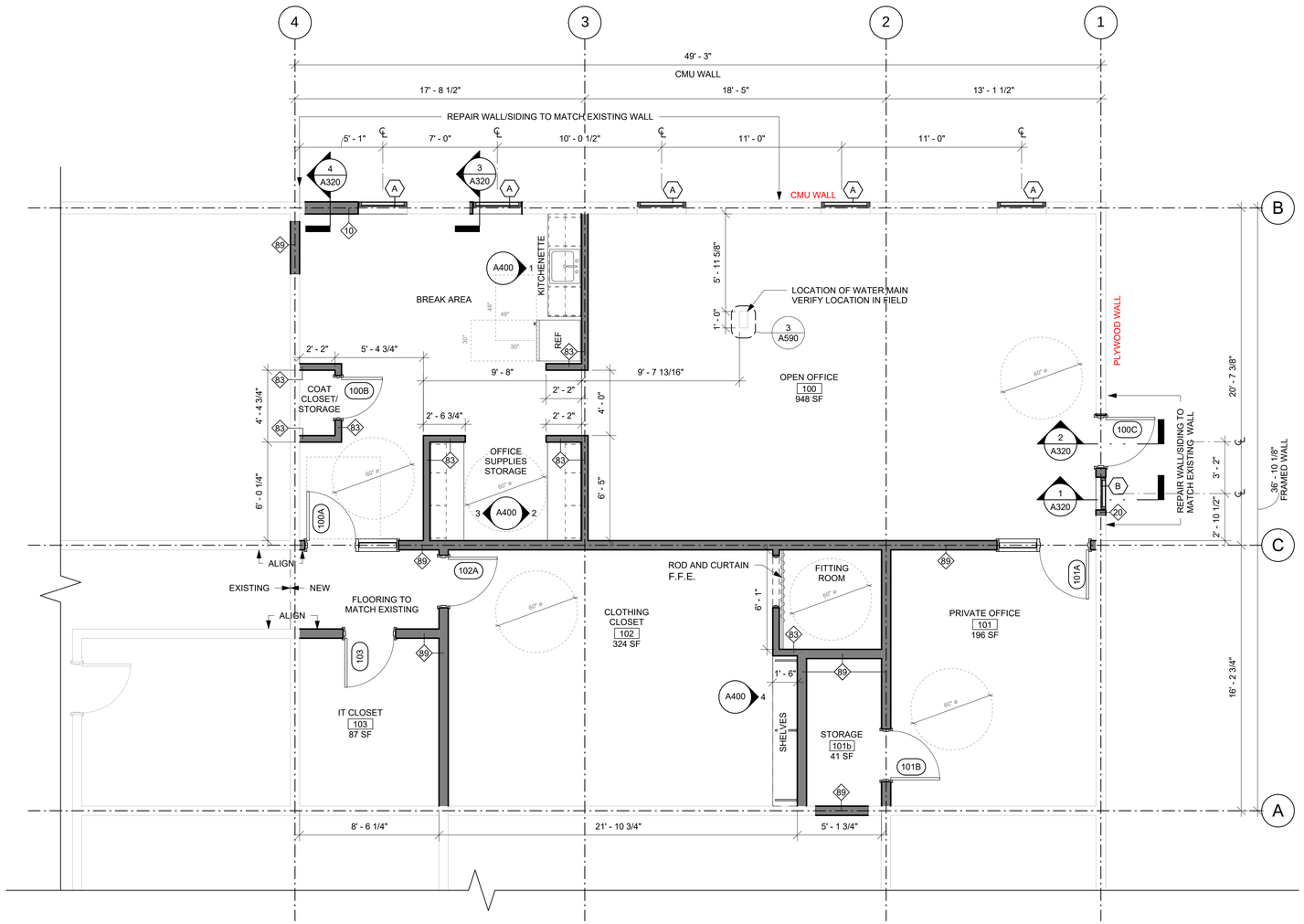

1 (N) OFFICE AND CLOTHING CLOSET

SCALE: 1/4" = 1'-0"

0 2' 4' 8'

9/24/2026 4:23:20 PM

GENERAL NOTES

1. -

KEYNOTES	
#	DESCRIPTION

SMR ARCHITECTS

SMR Architects
117 S. Main St., Suite 400
Seattle, WA 98104

PH: 206.623.1104
FX: 206.623.5285

MULTI-SERVICE CENTER OFFICE & CLOTHING CLOSET

1200 SOUTH 336TH STREET
FEDERAL WAY, WA 98003

NOT FOR CONSTRUCTION

ISSUED SETS

DATE	DESCRIPTION
09/25/06	COST ESTIMATE

REVISIONS / NOTES

NO	DATE	DESCRIPTION

AHJ STAMP

TITLE

LEVEL 1 PLAN

PERMIT #	
DRAWN	EK
CHECKED	KS
ISSUE DATE	09/25/2026
PROJECT #	24056
SHEET #	

A101

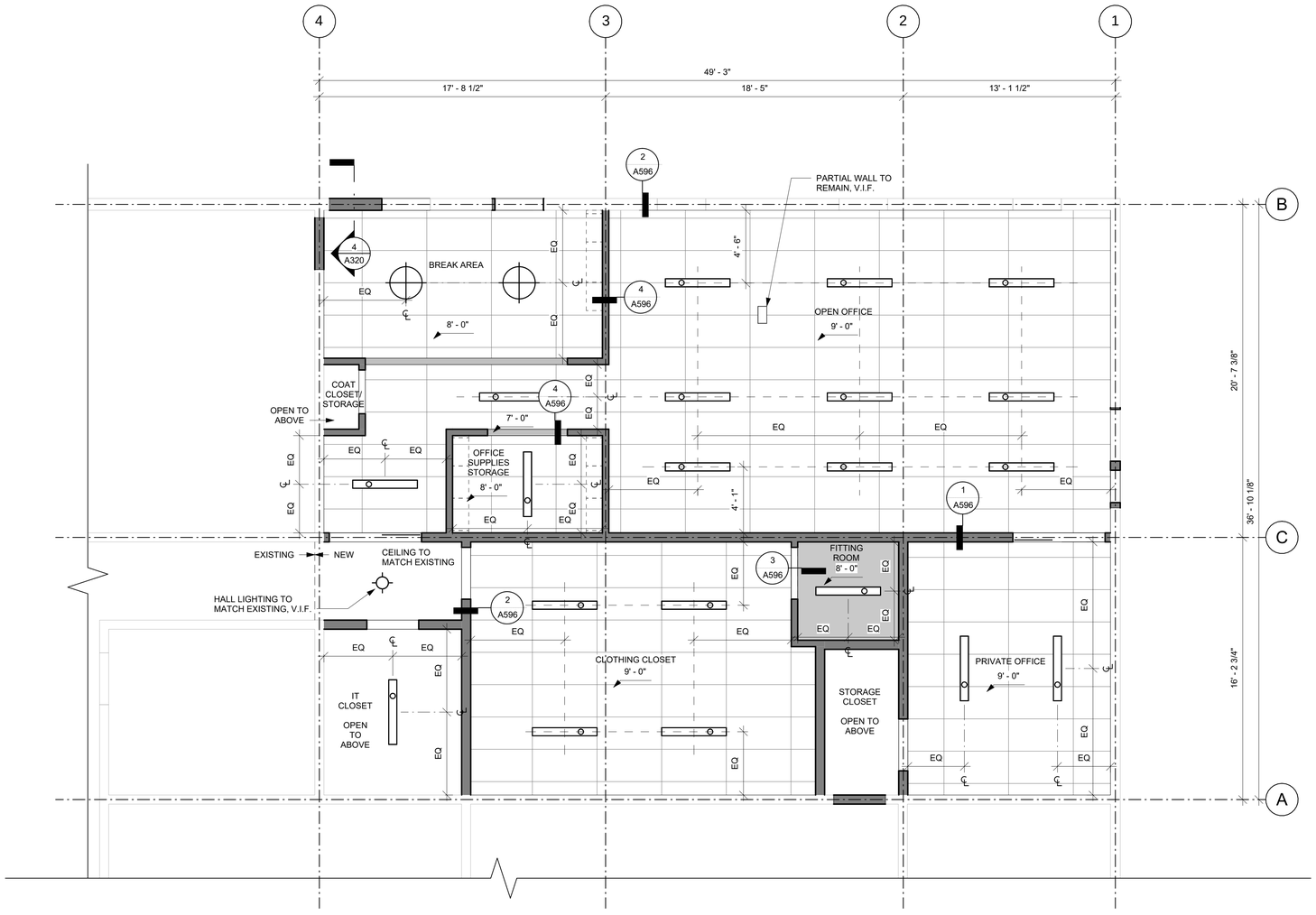

1 (N) OFFICE AND CLOTHING CLOSET REFLECTED CEILING PLAN

SCALE: 1/4" = 1'-0"

0 2' 4' 8'

RCP LEGEND - OVERALL

- CEILING - EXPOSED CONCRETE
- CEILING - EXPOSED INSULATION
- CEILING - ACOUSTIC CEILING TILE
- CEILING - GWB
- CEILING - GWB SOFFIT
- CEILING - WOOD GRILLE
- ACCESS PANEL
- MECH - HVAC CASSETTE
- MECH - RETURN GRILLE
- MECH - SUPPLY REGISTER
- MECH - COVE HEATER
- MECH - VENT SHROUD
- LIGHT - EXTERIOR WALL MOUNT
- LIGHT - PENDANT CIRCULAR
- LIGHT - PENDANT LINEAR
- LIGHT - RECESSED LINEAR
- LIGHT - SURFACE MOUNT LINEAR
- LIGHT - SURFACE MOUNT CIRCULAR SMALL
- LIGHT - SURFACE MOUNT CIRCULAR MEDIUM
- LIGHT - SURFACE MOUNT CIRCULAR LARGE
- LIGHT - WALL MOUNT LINEAR
- LIGHT - WALL MOUNT VANITY
- EXIT SIGN - CEILING MOUNT
- EXIT SIGN - WALL MOUNT
- EXIT SIGN - EMERGENCY LIGHTS

SMR ARCHITECTS

SMR Architects
117 S. Main St., Suite 400
Seattle, WA 98104

PH: 206.623.1104
FX: 206.623.5285

MULTI-SERVICE CENTER OFFICE & CLOTHING CLOSET

1200 SOUTH 336TH STREET
FEDERAL WAY, WA 98003

NOT FOR CONSTRUCTION

ISSUED SETS

DATE	DESCRIPTION
09/25/06	COST ESTIMATE

REVISIONS / NOTES

NO	DATE	DESCRIPTION

AHJ STAMP

TITLE

REFLECTED CEILING PLAN - LEVEL 1

PERMIT #	
DRAWN	EK
CHECKED	KS
ISSUE DATE	09/25/2026
PROJECT #	24056
SHEET #	

A150

9/24/2026 4:23:21 PM

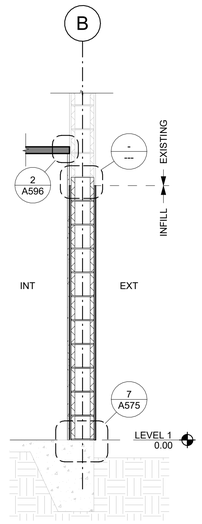

4 INFILL AT CMU WALL
SCALE: 1/2" = 1'-0"

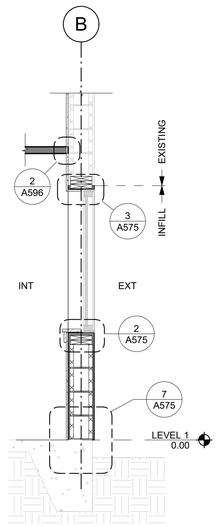

3 WINDOW AT CMU WALL
SCALE: 1/2" = 1'-0"

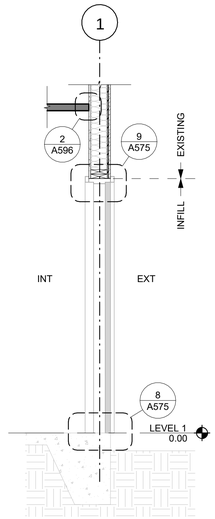

2 DOOR AT FRAMED WALL
SCALE: 1/2" = 1'-0"

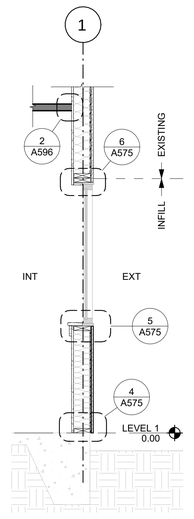

1 WINDOW AT FRAMED WALL
SCALE: 1/2" = 1'-0"

GENERAL NOTES

1. -

SMR ARCHITECTS

SMR Architects
117 S. Main St., Suite 400
Seattle, WA 98104

PH: 206.623.1104
FX: 206.623.5285

MULTI-SERVICE CENTER OFFICE & CLOTHING CLOSET

1200 SOUTH 336TH STREET
FEDERAL WAY, WA 98003

NOT FOR CONSTRUCTION

ISSUED SETS

DATE	DESCRIPTION
09/25/06	COST ESTIMATE

REVISIONS / NOTES

NO	DATE	DESCRIPTION

AHJ STAMP

TITLE

SECTION - EXTERIOR WALL

PERMIT #	
DRAWN	EK
CHECKED	KS
ISSUE DATE	09/25/2026
PROJECT #	24056
SHEET #	

A320

9/24/2026 4:23:21 PM

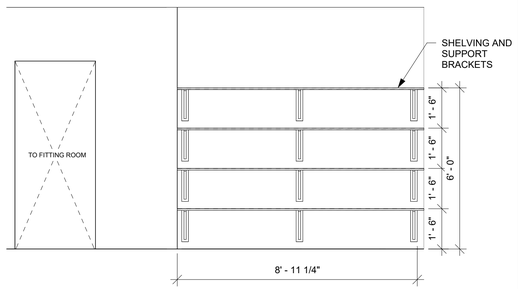

4 CLOTHING CLOSET SHELVING
SCALE: 3/8" = 1'-0"

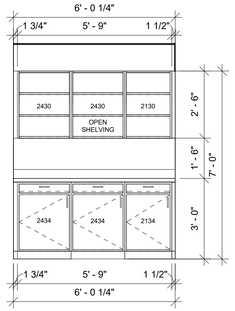

3 OFFICE STORAGE RIGHT SIDE
SCALE: 3/8" = 1'-0"

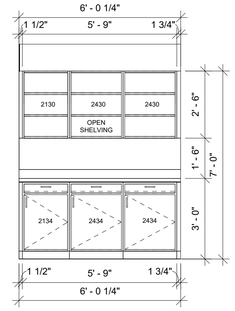

2 OFFICE STORAGE LEFT SIDE
SCALE: 3/8" = 1'-0"

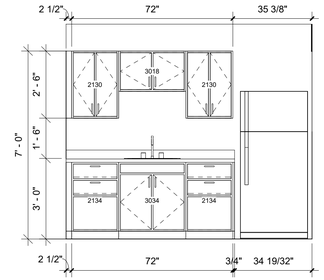

1 KITCHENETTE
SCALE: 3/8" = 1'-0"

SMR ARCHITECTS

SMR Architects
117 S. Main St., Suite 400
Seattle, WA 98104

PH: 206.623.1104
FX: 206.623.5285

MULTI-SERVICE CENTER OFFICE & CLOTHING CLOSET

1200 SOUTH 336TH STREET
FEDERAL WAY, WA 98003

NOT FOR CONSTRUCTION

ISSUED SETS

DATE	DESCRIPTION
09/25/06	COST ESTIMATE

REVISIONS / NOTES

NO	DATE	DESCRIPTION

AHJ STAMP

TITLE

INTERIOR ELEVATIONS

PERMIT #	
DRAWN	EK
CHECKED	KS
ISSUE DATE	09/25/2026
PROJECT #	24056
SHEET #	

A400

9/24/2026 4:23:21 PM

WALL ASSEMBLY TYPES: EXTERIOR WALLS

NO.	DIAGRAM	ASSEMBLY COMPONENTS	FIRE RATING **FIRE RATING REPORT NO.**	S.T.C. RATING **S.T.C. RATING REPORT NO.**	THERMAL PROTECTION
10 CMU WALL ***MATCH TO EXISTING CONDITION**	**INT.** **EXT.** 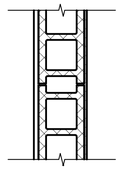			-	
		• (1) LAYER 5/8" TYPE "X" GWB			
		• 8"x8"x16" CMU BLOCK			
		• 1/4" EXTERIOR FINISH			
20 PLYWOOD OVER WOOD STUDS ***MATCH TO EXISTING CONDITION**	**INT.** **EXT.** 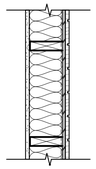			-	**R-25**
		• (1) LAYER 1/2" GWB	*		
		• VAPOR BARRIER			
		• R-25 UNFACED MINERAL FIBER INSULATION			**R-25**
		• 2X6 WOOD STUD @ 16" O.C. MAX			
		• 1/2" MIN THICK PLYWOOD SHEATHING	*		
		• 5/8" TEXTURE 1-11 PLYWOOD SIDING			

WALL ASSEMBLY TYPES: INTERIOR WALLS

NO.	DIAGRAM	ASSEMBLY COMPONENTS	FIRE RATING **FIRE RATING REPORT NO.**	S.T.C. RATING **S.T.C. RATING REPORT NO.**	THERMAL PROTECTION
83 2X4 WOOD STUD WALL	- - 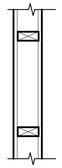	**GENERIC**		-	-
		• (1) LAYER 1/2" GWB			
		• 2x4 WOOD STUD @ 16" O.C.MIN/24" O.C. MAX			
		• (1) LAYER 1/2" GWB			
89 2X6 WOOD STUD WALL NONRATED W/ INSULATION	- - 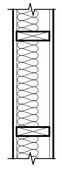	-	-	-	-
		• (1) LAYER 1/2" GWB			
		• 3-1/2" GLASS FIBER INSULATION			
		• 2x6 WOOD STUD @ 16" O.C.MIN/24" O.C. MAX			
		• (1) LAYER 1/2" GWB			
90 2X6 WOOD STUD WALL	- - 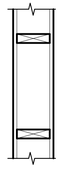	**GENERIC**		-	-
		• (1) LAYER 1/2" GWB			
		• 2X6 WOOD STUD @ 24" O.C.			
		• (1) LAYER 1/2" GWB			

SMR ARCHITECTS

SMR Architects
117 S. Main St., Suite 400
Seattle, WA 98104

PH: 206.623.1104
FX: 206.623.5285

MULTI-SERVICE CENTER OFFICE & CLOTHING CLOSET

1200 SOUTH 336TH STREET
FEDERAL WAY, WA 98003

NOT FOR CONSTRUCTION

ISSUED SETS

DATE	DESCRIPTION
09/25/06	COST ESTIMATE

REVISIONS / NOTES

NO	DATE	DESCRIPTION

AHJ STAMP

TITLE

ASSEMBLIES

PERMIT #	
DRAWN	EK
CHECKED	KS
ISSUE DATE	09/25/2026
PROJECT #	24056
SHEET #	

A500

9/24/2026 4:23:22 PM

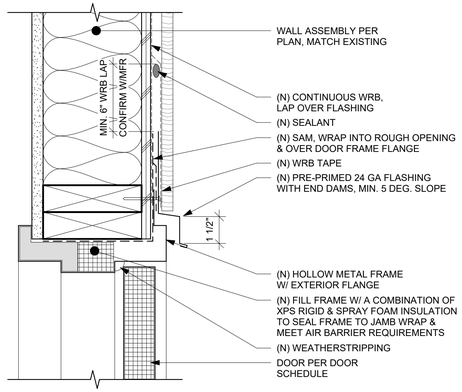

9 SECTION - DOOR HEAD @ FRAMED WALL

SCALE: 3" = 1'-0"

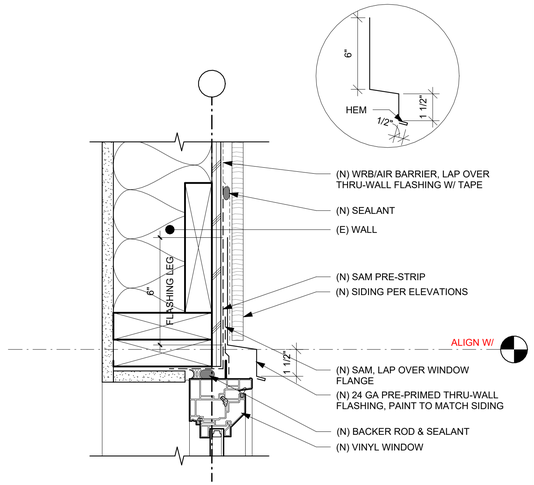

6 SECTION - VINYL WINDOW DROPPED HEAD

SCALE: 3" = 1'-0"

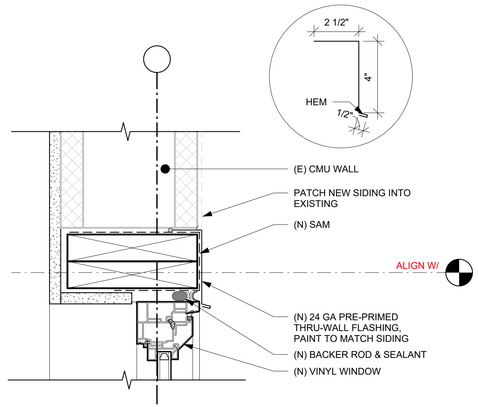

3 SECTION - VINYL WINDOW HEAD, TYP

SCALE: 3" = 1'-0"

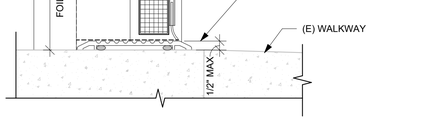

8 SECTION - DOOR SILL @ CONCRETE

SCALE: 3" = 1'-0"

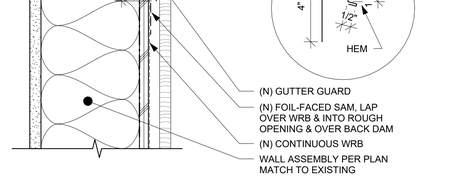

5 SECTION - VINYL WINDOW SILL, TYP1

SCALE: 3" = 1'-0"

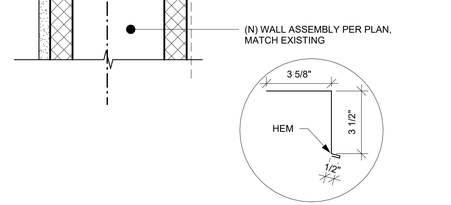

2 SECTION - VINYL WINDOW SILL, TYP

SCALE: 3" = 1'-0"

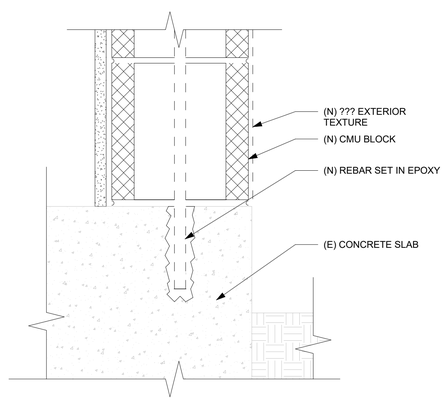

7 SECTION - CMU WALL INFILL BASE

SCALE: 3" = 1'-0"

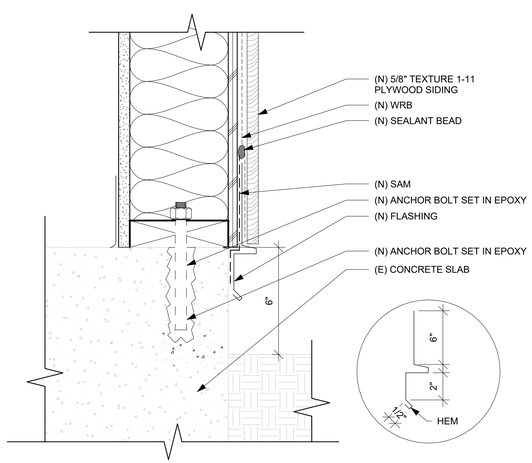

4 SECTION - FRAMED WALL INFILL BASE

SCALE: 3" = 1'-0"

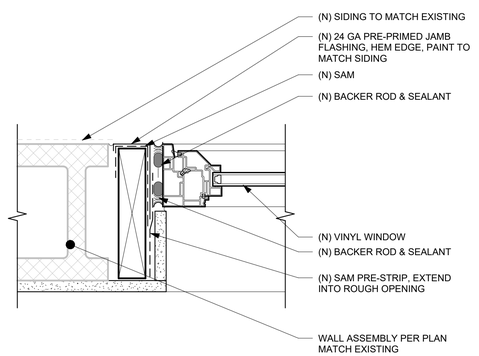

1 PLAN - VINYL WINDOW JAMB, TYP

SCALE: 3" = 1'-0"

SMR ARCHITECTS

SMR Architects
117 S. Main St., Suite 400
Seattle, WA 98104

PH: 206.623.1104
FX: 206.623.5285

MULTI-SERVICE CENTER OFFICE & CLOTHING CLOSET

1200 SOUTH 336TH STREET
FEDERAL WAY, WA 98003

NOT FOR CONSTRUCTION

ISSUED SETS

DATE	DESCRIPTION
09/25/06	COST ESTIMATE

REVISIONS / NOTES

NO	DATE	DESCRIPTION

AHJ STAMP

TITLE

DETAILS - EXTERIOR

PERMIT #	
DRAWN	EK
CHECKED	KS
ISSUE DATE	09/25/2026
PROJECT #	24056
SHEET #	

A575

9/24/2026 4:23:22 PM

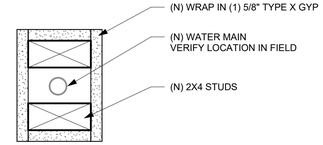

3 PLAN - WATER MAIN ENCLOSURE
SCALE: 3" = 1'-0"

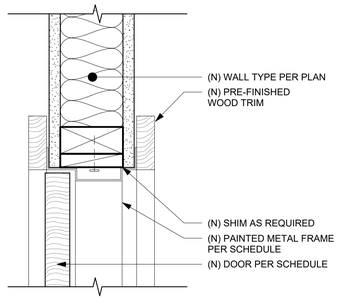

5 SECTION - NON-RATED INT. HM DOOR HEAD/JAMB
SCALE: 3" = 1'-0"

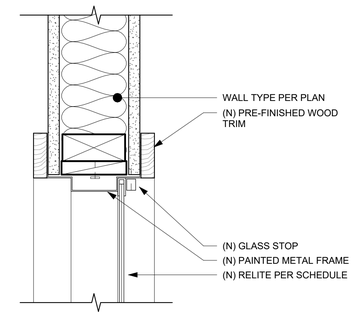

2 SECTION - HM RELITE HEAD/JAMB
SCALE: 3" = 1'-0"

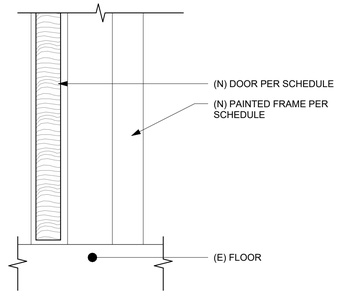

4 SECTION - NON-RATED INT. DOOR SILL
SCALE: 3" = 1'-0"

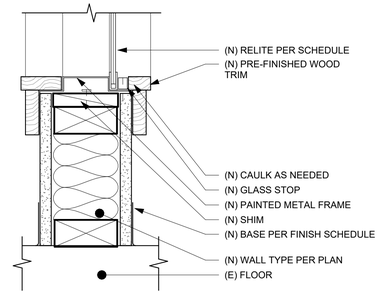

1 SECTION - HM RELITE SILL
SCALE: 3" = 1'-0"

SMR ARCHITECTS

SMR Architects
117 S. Main St., Suite 400
Seattle, WA 98104

PH: 206.623.1104
FX: 206.623.5285

MULTI-SERVICE CENTER OFFICE & CLOTHING CLOSET

1200 SOUTH 336TH STREET
FEDERAL WAY, WA 98003

NOT FOR CONSTRUCTION

ISSUED SETS

DATE	DESCRIPTION
09/25/06	COST ESTIMATE

REVISIONS / NOTES

NO	DATE	DESCRIPTION

AHJ STAMP

TITLE

DETAILS - INTERIOR

PERMIT #	
DRAWN	EK
CHECKED	KS
ISSUE DATE	09/25/2026
PROJECT #	24056
SHEET #	

A590

9/24/2026 4:23:22 PM

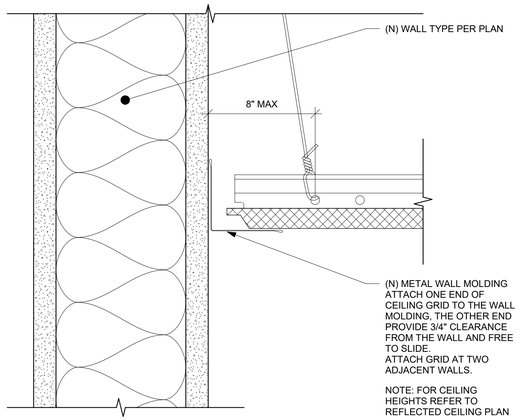

9 SECTION - ACT PERIMETER CLOSER ANGLES
SCALE: 6" = 1'-0"

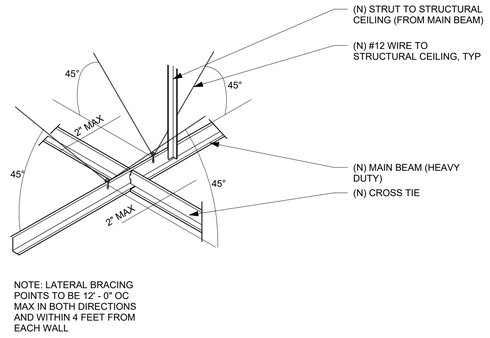

6 AXON - SUSPENDED CEILING
SCALE: 1 1/2" = 1'-0"

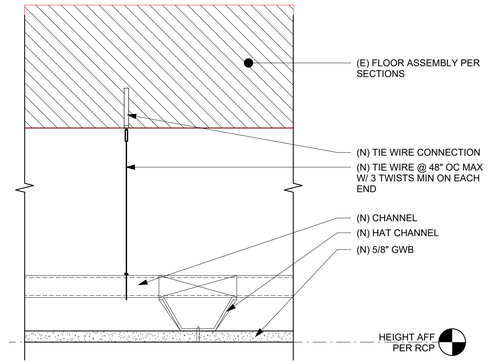

3 SECTION - SUSPENDED GWB CEILING
SCALE: 3" = 1'-0"

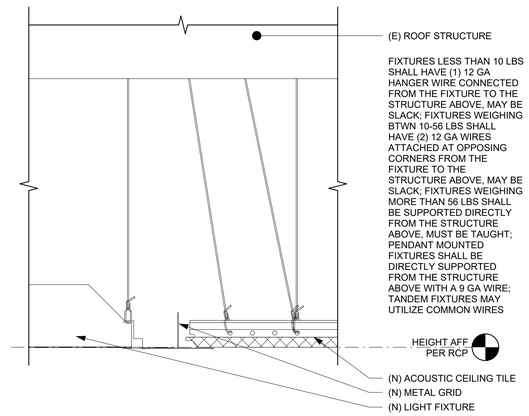

5 SECTION - LIGHT FIXTURE @ ACT
SCALE: 3" = 1'-0"

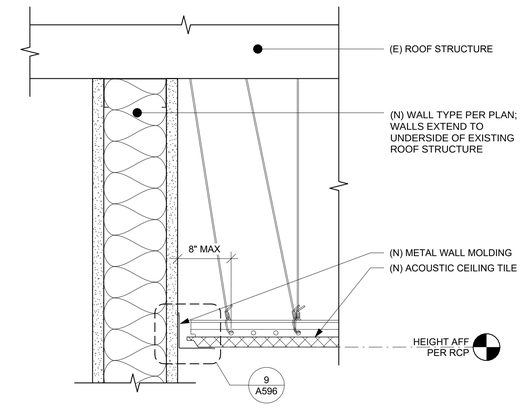

2 SECTION - WALL TERMINATION ACT, TYP
SCALE: 3" = 1'-0"

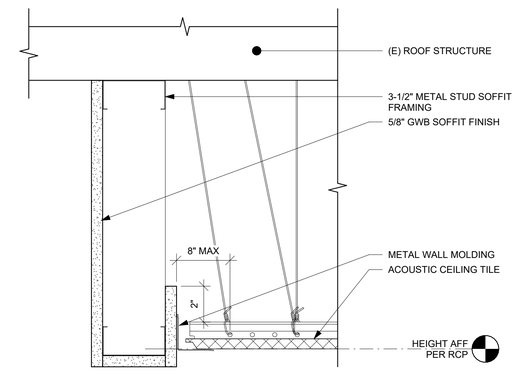

4 SECTION - GWB SOFFIT @ EDGE OF ACT CEILING
SCALE: 3" = 1'-0"

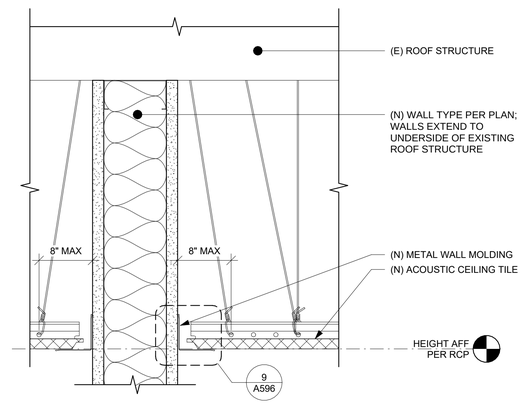

1 SECTION - WALL TERMINATION ACT @ BOTH SIDES
SCALE: 3" = 1'-0"

SMR ARCHITECTS
SMR Architects
117 S. Main St., Suite 400
Seattle, WA 98104
PH: 206.623.1104
FX: 206.623.5285

MULTI-SERVICE CENTER OFFICE & CLOTHING CLOSET

1200 SOUTH 336TH STREET
FEDERAL WAY, WA 98003

NOT FOR CONSTRUCTION

ISSUED SETS

DATE	DESCRIPTION
09/25/06	COST ESTIMATE

REVISIONS / NOTES

NO	DATE	DESCRIPTION

AHJ STAMP

TITLE

DETAILS - FINISH

PERMIT #	
DRAWN	KC/ME
CHECKED	Checker
ISSUE DATE	09/25/2025
PROJECT #	24056
SHEET #	A596

9/24/2026 4:23:23 PM

600 DOOR SCHEDULE - OVERALL

DOOR #	ROOM #	ROOM	SIZE			FIRE RATING	U-VALUE	DOOR			FRAME TYPE	DETAILS			REMARKS
			W	H	THK			TYPE	MATERIAL	HW		HEAD	SILL	JAMB	
LEVEL 1															
100A	100	OPEN OFFICE	3' - 0"	6' - 8"	0' - 1 3/4"	-	-	B	SC WD	1	HM	4/A590	5/A590	4/A590	
100B	100	OPEN OFFICE	2' - 6"	6' - 8"	0' - 1 3/4"	-	-	A	SC WD	3	KDW	4/A590	5/A590	4/A590	
100C	100	OPEN OFFICE	3' - 0"	6' - 8"	0' - 1 3/4"	-	-	C	HM	4	KD	6/A575	4/A575	4/A575	
101A	100	OPEN OFFICE	3' - 0"	6' - 8"	0' - 1 3/4"	-	-	B	SC WD	1	HM	4/A590	5/A590	4/A590	
101B	101b	STORAGE	3' - 0"	6' - 8"	0' - 1 3/4"	-	-	A	SC WD	2	KDW	4/A590	5/A590	4/A590	
102A	102	CLOTHING CLOSET	3' - 0"	6' - 8"	0' - 1 3/4"	-	-	A	SC WD	2	KDW	4/A590	5/A590	4/A590	
103	103	IT CLOSET	3' - 0"	6' - 8"	0' - 1 3/4"	-	-	A	SC WD	2	KDW	4/A590	5/A590	4/A590	

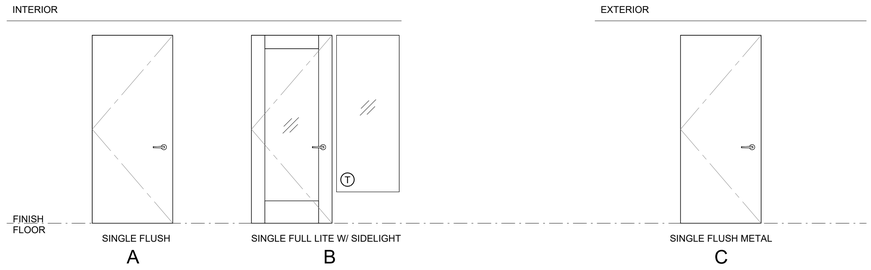

WINDOW SCHEDULE - VINYL

TYPE	SIZE					OPERATION	FRAME	GLAZING TYPE	FIRE RATING	NFRC RATING	U-VALUE	SHGC	SQ FT	REMARKS	QTY	TOTAL AREA (SF)
	RO WIDTH	RO HEIGHT	WIDTH	HEIGHT	SILL HEIGHT											
A	3' - 0"	4' - 0"	2' - 11 1/2"	3' - 11 1/2"	3' - 0"	FIXED	HM	-	-	-	-	0	12 SF		5	59 SF
B	2' - 0"	4' - 0"	1' - 11 1/2"	3' - 11 1/2"	3' - 0"	FIXED	HM	-T	-	-	-	0	8 SF		1	8 SF
															6	66 SF

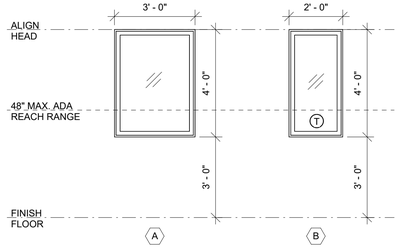

620 FINISH SCHEDULE

RM#	ROOM NAME	FLOOR	BASE	NORTH WALL	EAST WALL	SOUTH WALL	WEST WALL	CEILING	COUNTERTOP	HALF WALL	WALL CAP	CABINETS	REMARKS
LEVEL 1													
90	HALLWAY	MATCH EXISITNG	MATCH EXISITNG	PT-1	PT-1	PT-1	-	PT-1	-	-	-	-	
100	OPEN OFFICE	LVT-1	RB-1	PT-1, PT-2	PT-1	PT-1	PT-1	ACT	SS-1	PT-1	WD-2	CAB-1	
101	PRIVATE OFFICE	LVT-1	RB-1	PT-1	PT-1	PT-2	PT-1	ACT	-	-	-	-	
101b	STORAGE	LVT-1	RB-1	PT-1	PT-1	PT-1	PT-1	PT-1	-	-	-	-	
102	CLOTHING CLOSET	LVT-1	RB-1	PT-1	PT-1	PT-1	PT-1	ACT, PT-1	-	-	-	-	
103	IT CLOSET	LVT-1	RB-1	PT-1	PT-1	PT-1	PT-1	PT-1	-	-	-	-	

NOTES:
A. REFER TO INTERIOR ELEVATIONS FOR SPECIFIC LOCATIONS.
B. REFER TO SPECIFICATIONS FOR SPECIFIC PRODUCTS AND APPLICATIONS.

PAINT KEY:

PAINT #	DESCRIPTION
PT-1	BASE - SW 7551 GREEK VILLA
PT-2	COLOR TO BE SELECTED BY ARCHITECT

ABBREVIATION KEY:

ACT	ACOUSTICAL CEILING TILE	COLOR: ARMSTRONG CIRRUS SECOND LOOK SCORED, WHITE
CAB-1	SMART CABINETRY -	COLOR: TBD
GWB	GYPSUM WALL BOARD	
LVT -1	LUXURY VINYL TILE -	COLOR: TBD
PT	PAINT	
RB-1	ROPPE 700 SERIES -	COLOR: TBD
SG	SEMI-GLOSS	
SS-1	TOPLINE COUNTERS -	COLOR: ICED WHITE
WD	WOOD BASE -	COLOR: HEMLOCK, CLEAR FINISH

HARDWARE GROUPS:

HARDWARE GROUP NO. 01

QTY.		DESCRPTION
3	EA	HINGE
1	EA	ENTRY LOCK
1	EA	K-I-L CYLINDER
1	EA	ELECTRIC STRIKE
1	EA	SURFACE CLOSER
1	EA	KICK PLATE
1	EA	WALL STOP
1	EA	GASKETING
1	EA	WIRE HARNESS
		POWER SUPPLY
		CARD READER

HARDWARE GROUP NO. 02

3	EA	HINGE
1	EA	STOREROOM LOCK
1	EA	K-I-L CYLINDER
1	EA	SURFACE CLOSER
1	EA	KICK PLATE
1	EA	WALL STOP

HARDWARE GROUP NO. 03

3	EA	HINGE
1	EA	PASSAGE
1	EA	SURFACE CLOSER
1	EA	KICK PLATE

HARDWARE GROUP NO. 04

3	EA	HINGE
1	EA	PANIC HARDWARE
1	EA	K-I-L CYLINDER
1	EA	FSIC CORE
1	EA	SURFACE CLOSER
1	EA	KICK PLATE
1	SET	GASKETING
1	EA	DOOR SWEEP
1	EA	THRESHOLD

DOORS

GENERAL NOTES

1. DOOR OPENING FORCE SHALL NOT EXCEED 10 LBS OF FORCE OR LESS AT ALL PUBLIC EXTERIOR DOORS. INTERIOR DOOR FORCES SHALL MEET 5 POUNDS OR LESS PER 2017 ICC A117.1 XXX.X. INTERIOR DOOR HARDWARE SHALL BE EASILY USABLE WITH ONE HAND AND NOT REQUIRE TIGHT GRIPPING OR TWISTING.
2. PROVIDE TEMPERED GLAZING WHEN DOOR SWINGS OVER RELITE, WITHIN 12" OF DOOR JAMB, OR LESS THAN 18" ABOVE FINISH FLOOR.
3. **PER IBC XXX.X:** ALL FIRE DOOR ASSEMBLIES SHALL BE LABELED BY AN APPROVED AGENCY, THE LABELS SHALL COMPLY WITH NFPA 80, AND SHALL BE PERMANENTLY AFFIXED TO THE DOOR OR FRAME.
4. DOOR HANDLES, PULLS, LATCHES, LOCKS AND OTHER OPERATING PARTS ON DOORS SHALL NOT REQUIRE TIGHT GRASPING, TIGHT PINCHING OR TWISTING OF THE WRIST TO OPERATE PER IBC XXX.X, AND NO SPECIAL KNOWLEDGE OR KEY PER IBC XXX.X.
5. ALL NEW FENESTRATION TO BE NFRC 100 AND NFRC 200 LABELED AND CERTIFIED PER THE XXX.X ENERGY CODE, SECTION XXX.X.
6. ALL EXTERIOR DOORS TO BE INSULATED, THERMALLY BROKEN, AND PART OF AIR BARRIER; DOOR FRAME TO BE FILLED WITH SPRAY FOAM.

REMARKS

1. ELECTRONIC ADA PUSH PAD
2. STRIKE RELEASE
3. PANIC HARDWARE
4. U-VALUE FOR GLAZED & OPAQUE EXTERIOR DOORS = 0.25 PER SEC TABLE R406.2 OPTION 1B.2. ACCESS CONTROL, CARD READER, WITH ELECTRIC TRIM.
5. PROVIDE PANIC HARDWARE.
6. EXTERIOR DOOR, SEE GENERAL NOTES FOR THERMAL VALUES.
7. PROVIDE ELECTRIC TRIM FOR REMOTE ACCESS CONTROL. NO CARD READER.

LEGEND

SC WD: SOLID CORE WOOD
HM: HOLLOW METAL
WD: WOOD
KD: KNOCK DOWN FRAME
KDW: KNOCK DOWN FRAME W/ WOOD TRIM
(T): TEMPERED GLAZING

WINDOWS

GENERAL NOTES

1. CONTRACTOR TO VERIFY QUANTITIES BASED ON PLANS & ELEVATIONS.
2. REFER TO ELEVATIONS / SECTIONS FOR HEAD / JAMB / SILL DETAILS.
3. REFER TO ELEVATIONS FOR OPERATION.
4. WINDOW OPENINGS TO NOT ALLOW THE PASSAGE OF A 4" DIAMETER SPHERE WHEN THE WINDOW IS IN ITS LARGEST OPEN POSITION.
5. (T) = TEMPERED GLASS

REMARKS - VINYL WINDOW

1. EXTERIOR WINDOWS TO BE FITTED WITH SECURITY GLASS.

GENERAL NOTES - RELITE WINDOW

1. CONTRACTOR TO VERIFY QUANTITIES BASED ON PLANS & INTERIOR ELEVATIONS.
2. PROVIDE TEMPERED GLAZING WHEN DOOR SWINGS OVER RELITE, WITHIN 12" OF DOOR JAMB, OR LESS THAN 18" ABOVE FINISH FLOOR.
3. (T) = TEMPERED GLASS

REMARKS - RELITE WINDOW

1. -

SMR ARCHITECTS

SMR Architects
117 S. Main St., Suite 400
Seattle, WA 98104

PH: 206.623.1104
FX: 206.623.5285

MULTI-SERVICE CENTER OFFICE & CLOTHING CLOSET

1200 SOUTH 336TH STREET
FEDERAL WAY, WA 98003

NOT FOR CONSTRUCTION

ISSUED SETS

DATE	DESCRIPTION
09/25/06	COST ESTIMATE

REVISIONS / NOTES

NO	DATE	DESCRIPTION

AHJ STAMP

TITLE

SCHEDULES

PERMIT #	
DRAWN	EK
CHECKED	KS
ISSUE DATE	09/25/2026
PROJECT #	24056
SHEET #	

A600

9/24/2026 4:23:23 PM

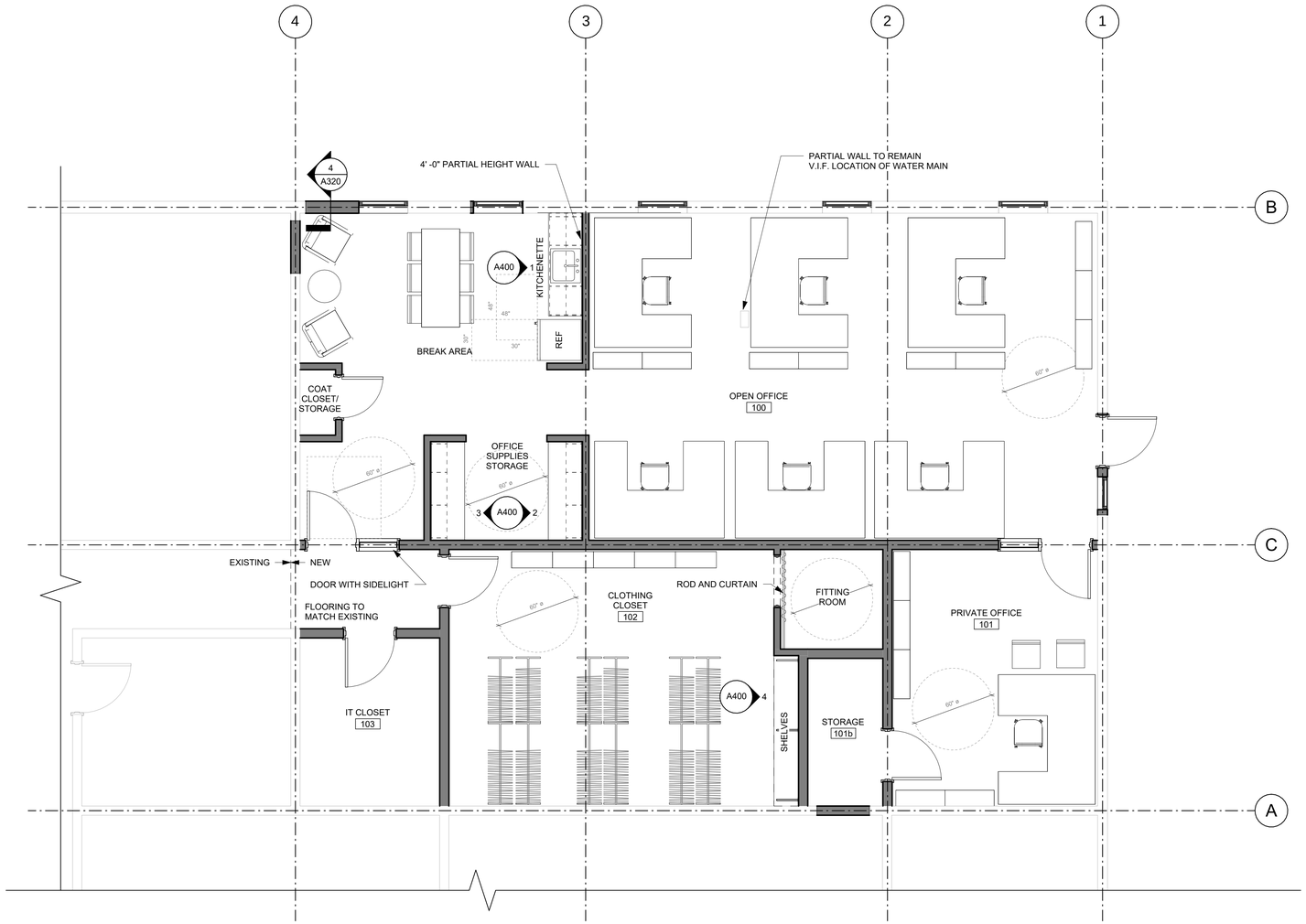

1 (N) OFFICE AND CLOTHING CLOSET_FURNITURE

SCALE: 1/4" = 1'-0"

0 2' 4' 8'

GENERAL NOTES

1. -

SMR Architects
117 S. Main St., Suite 400
Seattle, WA 98104

PH: 206.623.1104
FX: 206.623.5285

MULTI-SERVICE CENTER OFFICE & CLOTHING CLOSET

1200 SOUTH 336TH STREET
FEDERAL WAY, WA 98003

NOT FOR CONSTRUCTION

ISSUED SETS

DATE	DESCRIPTION
09/25/06	COST ESTIMATE

REVISIONS / NOTES

NO	DATE	DESCRIPTION

AHJ STAMP

TITLE

LEVEL 1 PLAN - FURNITURE PLAN

PERMIT #	
DRAWN	EK
CHECKED	KS
ISSUE DATE	09/25/2026
PROJECT #	24056
SHEET #	

A700

9/24/2026 4:23:23 PM

MECHANICAL SYMBOLS LEGEND

HYDRONIC SYSTEM LABELS

- PIPE BREAK (CONTINUATION)
- HYDRONIC SUPPLY
- HYDRONIC RETURN
- DIRECTION OF FLOW
- CAP
- HEAT TRACED PIPING

HYDRONIC VALVES AND SPECIALTIES

- F.O. / F.C. — 2-WAY ELECTRIC CONTROL VALVE; FAIL OPEN / FAIL CLOSED
- 3-WAY ELECTRIC CONTROL VALVE
- 4-WAY CONTROL VALVE

DUCTWORK LABELS

- INTERNALLY LINED DUCT
- HIDDEN DUCT
- 16X12 — DUCT (1ST DIMENSION SIDE SHOWN, 2ND DIMENSION OTHER SIDE)
- REMOVE DUCT, PIPE OR MECH. EQUIPMENT
- FLEX DUCT
- RECTANGULAR SUPPLY DUCT OUT OF PAGE
- RECTANGULAR SUPPLY DUCT INTO PAGE
- SUPPLY DIFFUSER
- OUTSIDE AIR DIFFUSER
- RECTANGULAR RETURN / EXHAUST DUCT OUT OF PAGE
- RECTANGULAR RETURN / EXHAUST DUCT INTO PAGE
- OR — RETURN OR EXHAUST GRILLE
- TURNING VANES
- STRAIGHT TAP
- TAPERED FITTING
- BELL MOUTH FITTING
- CONICAL FITTING
- 45 DEG. ANGLE TAP
- ROUND ELBOW OUT OF PAGE
- ROUND ELBOW INTO PAGE
- ROUND DUCT OUT OF PAGE
- ROUND DUCT INTO PAGE
- ROUND DUCT BREAK (CONTINUATION)
- RECTANGULAR DUCT BREAK (CONTINUATION)
- FLEX CONNECTION

REFERENCE SYMBOLS

- M-1 — DETAIL NUMBER; SHEET
- FLAG NOTE
- 1 — REVISION TAG
- AHU-1 — MECHANICAL EQUIPMENT
- D / 0 — DIFFUSER/GRILLE TYPE; CFM
- 1 — SECTION NUMBER; SHEET NUMBER

LIFE SAFETY SYMBOLS

- CEILING RADIATION DAMPER
- OR — COMBINATION SMOKE/FIRE DAMPER
- HORIZONTAL SMOKE DAMPER
- FIRE DAMPER

CONTROL SYMBOLS

- VOLUME DAMPER
- M — MOTORIZED CONTROL DAMPER
- T — THERMOSTAT IN DUCT
- P — PRESSURE SENSOR IN DUCT
- OR — REMOTE OPERATED VOLUME DAMPER
- BACKDRAFT DAMPER
- PRESSURE INDEPENDENT VOLUME CONTROLLER (TROX VFC)
- PRESSURE INDEPENDENT VOLUME CONTROLLER W/ ACTUATOR (TROX VFC EØ / MØ)
- T — THERMOSTAT, MOUNT @ 4'-0" A.F.F.
- R — REFRIGERANT DETECTOR/CONTROLLER
- S — SENSOR
- C — CONTROL DEVICE
- D — MAGNETIC DOOR SWITCH
- CO / GEF-1 — CARBON MONOXIDE DETECTOR WITH FAN INDICATED
- CO2 — CARBON DIOXIDE DETECTOR

PIPING SYSTEM LABELS

- G — NATURAL GAS OR PROPANE
- BALL VALVE MANUAL LEVER
- BUTTERFLY VALVE MANUAL LEVER
- BUTTERFLY GEAR VALVE
- GLOBE VALVE MANUAL LEVER
- BALANCE VALVE (CIRCUIT SETTER)
- BALANCE VALVE (PRESSURE INDEPENDENT)
- PIPE TO DRAIN
- PRESSURE SAFETY VALVE
- AAV — AUTOMATIC AIR VENT
- MAV — MANUAL AIR VENT
- WYE STRAINER
- WYE STRAINER WITH VALVE AND HOSE END CAP
- HEAT TRACE PIPING
- HOSE END AND CAP
- EXPANSION LOOP

ABBREVIATIONS

ACT	ACOUSTICAL CEILING TILE
ADA	AMERICANS WITH DISABILITIES ACT
ADJ	ADJUSTABLE
AFF	ABOVE FINISHED FLOOR
AFG	ABOVE FINISHED GRADE
ALT	ALTERNATE
AP	ACCESS PANEL
APPROX	APPROXIMATE
ARCH	ARCHITECTURAL/ARCHITECT
AS	AIR SEPARATOR
AUX	AUXILIARY
BFF	BELOW FINISHED FLOOR
BHP	BRAKE HORSE POWER
BLDG	BUILDING
BOP	BOTTOM OF PIPE
BTU	BRITISH THERMAL UNIT
BTUH	BRITISH THERMAL UNIT PER HOUR
CA	COMBUSTION AIR
CFH	CUBIC FEET PER HOUR
CFM	CUBIC FEET PER MINUTE
C/L	CENTER LINE
CLG	CEILING
CO	CARBON MONOXIDE
CO2	CARBON DIOXIDE
COND	CONDENSATE
CW	COLD WATER
CX	CONNECT TO EXISTING
dB	DECIBEL
DB °F	DRY BULB TEMPERATURE
° OR DEG.	DEGREE
Ø OR DIA	DIAMETER
DL	DOOR LOUVER
DN	DOWN
DWG(S)	DRAWING(S)
DWV	DRAIN, WASTE, VENT
EX	EXISTING/EXISTING TO REMAIN
EA	EACH
EA	EXHAUST AIR
EAT	ENTERING AIR TEMPERATURE
ERU	ENERGY RECOVERY UNIT
ESP	EXTERNAL STATIC PRESSURE
ET	EXPANSION TANK
EWH	ELECTRIC WALL HEATER
EXP	EXPANSION
FC	FAIL CLOSED
FSD	FIRE/SMOKE DAMPER
FF	FINISHED FLOOR
FLA	FULL LOAD AMPS
FO	FAIL OPEN
FP	FIRE PROTECTION
FPM	FEET PER MINUTE
FPS	FEET PER SECOND
FT	FEET/FOOT
FTG	FOOTING
FOIC	FURNISHED BY OWNER INSTALLED BY CONTRACTOR
FOIO	FURNISHED BY OWNER INSTALLED BY OWNER
FSD	FIRE/SMOKE DAMPER
G	NATURAL GAS
GA	GAUGE
GAL	GALLON
GALV	GALVANIZED
G.C.	GENERAL CONTRACTOR
GSM	GALVANIZED SHEET METAL
H	HEIGHT
HD	HEAD
HP	HORSEPOWER
HVAC	HEATING VENTILATING AND AIR CONDITIONING
HW	HOT WATER
HX	HEAT EXCHANGER
HZ	HERTZ
ID	INSIDE DIAMETER/DIMENSION
IN	INCH/INCHES
IN WC	INCHES WATER COLUMN
KW	KILOWATT/KILOWATTS
LAT	LEAVING AIR TEMPERATURE
LBS	POUNDS
LF	LINEAL FOOT
LRA	LOCKED ROTOR AMPS
LTG	LIGHTING
LWT	LEAVING WATER TEMPERATURE
MBH	1000 BRITISH THERMAL UNIT PER HOUR
MCD	MOTORIZED CONTROL DAMPER
MD	MOTORIZED DAMPER
MED	MEDIUM
MEP	MECHANICAL, ELECTRICAL & PLUMBING
MEZZ	MEZZANINE
MIN	MINIMUM OR MINUTE
MISC	MISCELLANEOUS
N/A	NOT APPLICABLE
NC	NORMALLY CLOSED
NEG	NEGATIVE
NIC	NOT IN CONTRACT
NO	NORMALLY OPEN
NOM	NOMINAL
NPT	NATIONAL PIPE THREAD
NTS	NOT TO SCALE
OA/OSA	OUTSIDE AIR
OBD	OPPOSED BLADE DAMPER
OC	ON CENTER
OD	OUTSIDE DIAMETER
OFCI	OWNER FURNISHED CONTRACTOR INSTALLED
OFOI	OWNER FURNISHED OWNER INSTALLED
ΔP	PRESSURE DIFFERENTIAL
PERF	PERFORATED
Φ OR PH	PHASE
PIVD	PRESSURE INDEPENDENT VOLUME DAMPER
PLBG	PLUMBING
POC	POINT OF CONNECTION
PRV	PRESSURE REDUCING VALVE
PSF	POUNDS PER SQUARE FOOT
PSI	POUNDS PER SQUARE INCH
PSIG	POUNDS PER INCH GAUGE
PTAC	PACKAGE TERMINAL AIR CONDITIONER
QTY	QUANTITY
RA	RETURN AIR
RH	RELATIVE HUMIDITY
RM	ROOM
RPBP	REDUCED PRESSURE BACKFLOW PREVENTER
RPM	REVOLUTIONS PER MINUTE
RLX	RELOCATE EXISTING
RTU	ROOF TOP UNIT
RV	RELIEF VALVE
RX	REMOVE EXISTING
SA	SUPPLY AIR
SD	SMOKE DETECTOR
SF	SQUARE FOOT
S.L.	SOUND LINER
SP	STATIC PRESSURE
SPEC	SPECIFICATION
S/S, OR SS	STAINLESS STEEL
STD	STANDARD
T&P	TEMPERATURE AND PRESSURE RELIEF VALVE
TBD	TO BE DETERMINED
TEMP	TEMPERATURE
TOB	TOP OF BEAM
TOC	TOP OF CONCRETE
TOD	TOP OF DECK
TOJ	TOP OF JOIST
TOS	TOP OF SLAB/TOP OF STEEL
T&P	TEMPERATURE & PRESSURE
TSP	TOTAL STATIC PRESSURE
TYP	TYPICAL
UL	UNDERWRITERS LABORATORY
UNO	UNLESS NOTED OTHERWISE
UTR	UP THROUGH ROOF
V	VOLT
VAV	VARIABLE AIR VOLUME
VERT	VERTICAL
VFD	VARIABLE FREQUENCY DRIVE
VIB	VALVE-IN-BOX
VOL	VOLUME
W/	WITH
W/IN	WITHIN
W/O	WITHOUT
WB °f	WET BULB TEMPERATURE
WC	WATER COLUMN
WPD	WATER PRESSURE DROP
WT	WEIGHT

REFERENCE DESIGN CODES

2021 INTERNATIONAL BUILDING CODE (IBC)
2021 WASHINGTON STATE ENERGY CODE (WSEC)
2021 INTERNATIONAL FIRE CODE (IFC)
2021 INTERNATIONAL MECHANICAL CODE (IMC)
2021 INTERNATIONAL FUEL GAS CODE (IFGC)
2020 NATIONAL ELECTRICAL CODE (NEC)
2021 UNIFORM PLUMBING CODE (UPC)

SIDER+BYERS
MECHANICAL + ELECTRICAL ENGINEERS
150 Nickerson, Suite #305
Seattle, Washington 98109
Phone: 206.285.2966

SMR ARCHITECTS
SMR Architects
117 S. Main St., Suite 400
Seattle, WA 98104
PH: 206.623.1104
FX: 206.623.5285

MULTI-SERVICE CENTER OFFICE & CLOTHING CLOSET

1200 SOUTH 336TH STREET
FEDERAL WAY, WA 98003

JON SHAFER — STATE OF WASHINGTON — 47106 — REGISTERED PROFESSIONAL ENGINEER

ISSUED SETS

DATE	DESCRIPTION
08/27/26	MECHANICAL PERMIT AND CONSTRUCTION SET

REVISIONS / NOTES

NO	DATE	DESCRIPTION

AHJ STAMP

TITLE

COVER SHEET

DRAWN	JS
CHECKED	JS
ISSUE DATE	08/27/26
PROJECT #	26023
SHEET #	

M001

7/16/2026 4:34:31 PM

HVAC GENERAL NOTES

1. THESE PLANS ARE SCHEMATIC AND DO NOT SHOW EXACT ROUTING OR EVERY OFFSET, WHICH MAY BE REQUIRED. THE HVAC CONTRACTOR IS TO COORDINATE WITH ALL OTHER TRADES AND IS TO VERIFY ALL CLEARANCES BEFORE COMMENCING WORK.
2. MATERIALS, METHODS AND INSTALLATION SHALL COMPLY WITH THE PROVISIONS OF THE LATEST EDITION OF THE INTERNATIONAL MECHANICAL CODE, INTERNATIONAL BUILDING CODE, INTERNATIONAL FIRE CODE AND LOCAL CODES AND ORDINANCES.
3. DUCT CONSTRUCTION AND HANGING SHALL COMPLY WITH THE LATEST IMC AND WITH CURRENT SMACNA STANDARDS.
4. JOINTS OF DUCT SYSTEM SHALL BE SEALED WITH GASKETS OR LISTED MASTIC TYPE DUCT SEALANT.
5. DUCTS SHALL BE INSULATED AS INDICATED ON PLANS TO MEET THE REQUIREMENTS OF THE CURRENT INTERNATIONAL ENERGY CODE AND SPECIFICATION.
6. FLEXIBLE DUCTS SHALL ONLY BE USED WHERE SHOWN AND SHALL NOT EXCEED 6 FT IN LENGTH UNLESS NOTED OTHERWISE.
7. PROVIDE EARTHQUAKE RESTRAINT FOR HVAC EQUIPMENT IN ACCORDANCE WITH THE CURRENT IBC.
8. PIPING PENETRATIONS OF FIRE RATED WALLS OR FLOOR SHALL BE SLEEVED AND FIRE STOPPED WITH LISTED MATERIALS SO AS TO MAINTAIN THE INTEGRITY AND RATING OF THE FLOOR OR WALL.
9. PROVIDE RETURN DUCT SMOKE DETECTOR(S) FOR AUTOMATIC SHUT DOWN OF ALL HEATING OR COOLING EQUIPMENT DELIVERING IN EXCESS OF 2000 CFM IN ACCORDANCE WITH THE CURRENT INTERNATIONAL MECHANICAL CODE. POWER WIRING AND INTERLOCK WIRING WITH THE BUILDING FIRE ALARM SYSTEM IS BY THE ELECTRICAL CONTRACTOR.
10. HVAC EQUIPMENT, VALVES AND DAMPERS SHALL BE LOCATED IN EASILY ACCESSIBLE LOCATIONS, UNLESS SHOWN ON ARCHITECTURAL DRAWINGS. REQUIRED ACCESS PANELS SHALL BE PROVIDED BY THE HVAC CONTRACTOR AND INSTALLED BY THE GENERAL CONTRACTOR.
11. HVAC CONTRACTOR MUST COORDINATE WITH LIGHTING FIXTURES PRIOR TO DUCT AND PIPING INSTALLATION.

HVAC ENERGY CODE NOTES

1. SEE SCHEDULES FOR EQUIPMENT TYPE, CAPACITY AND EFFICIENCY. ALL EQUIPMENT SHALL MEET MINIMUM EFFICIENCY PER C403.3.2.
2. THERMOSTATIC CONTROLS IN THE SAME ZONE OR IN NEIGHBORING ZONES CONNECTED BY OPENINGS LARGER THAN 10% OF THE FLOOR AREA OF EITHER ZONE SHALL BE INTERLOCKED TO NOT ALLOW SIMULTANEOUS HEATING AND COOLING.
3. HEAT PUMPS WITH SUPPLEMENTARY ELECTRIC HEAT SHALL INCLUDE MICROPROCESSOR CONTROLS THAT MINIMIZE ELECTRIC HEAT USAGE DURING START-UP, SET-UP, AND DEFROST CONDITIONS. CONTROLS SHALL ANTICIPATE NEED FOR HEAT AND USE COMPRESSION HEATING AS THE FIRST STAGE. CONTROLS SHALL INDICATE WHEN ELECTRIC HEAT IS BEING USED THROUGH VISUAL MEANS. ELECTRIC HEAT SHALL NOT OPERATE ABOVE 40 F OUTSIDE AIR TEMPERATURE.
4. THERMOSTATIC CONTROLS SHALL BE CONFIGURED WITH AT LEAST A 5F DEADBAND BETWEEN HEATING AND COOLING SETPOINTS.
5. THERMOSTATS (OTHER THAN GROUP R) SHALL BE 7-DAY PROGRAMMABLE WITH AUTOMATIC SETBACK CONTROLS SET DOWN TO 55F AND UP TO 85F. CONTROLS SHALL MAINTAIN PROGRAMMING FOR AT LEAST 10 HOURS DURING LOSS OF POWER. CONTROLS SHALL HAVE A MANUAL 2 HR OVERRIDE FOR TEMPORARY OPERATION. CONTROLS SHALL ADJUST THE DAILY START TIME FOR MORNING WARMUP PRIOR TO SCHEDULED OCCUPANCY.
6. PROVIDE AMCA CLASS 1A MOTORIZED CONTROL DAMPERS FOR OUTSIDE AIR INTAKES, EXHAUST OUTLETS, RELIEF OPENINGS, STAIRWAY AND SHAFT VENTS AND RETURN SIDE OF AIRSIDE ECONOMIZERS.
7. AIR-COOLED UNITARY DIRECT-EXPANSION UNITS WITH A COOLING CAPACITY OF 54 MBH OR GREATER THAT ARE EQUIPPED WITH AN ECONOMIZER SHALL INCLUDE FAULT DETECTION AND DIAGNOSTICS (FDD).
8. PROVIDE GAS-FIRED HEATING EQUIPMENT WITH MODULATING OR STAGED COMBUSTION CONTROL FOR ALL EQUIPMENT OVER 225 MBH.
9. THERMOSTATS (GROUP R) SHALL BE 5-2 PROGRAMMABLE SCHEDULE WITH AT LEAST 2 SETBACK PERIODS PER DAY.
10. PROVIDE DUCT, SHAFT AND PLENUM INSULATION PER C403.2.8 AND SPECIFICATION SECTION 23 07 00.
11. SEAL ALL TRANSVERSE AND LONGITUDINAL SEAMS, JOINTS AND CONNECTIONS OF ALL DUCTWORK WITH WELDS, GASKETS OR MASTICS.
12. PROVIDE PIPE INSULATION PER ENERGY CODE SECTION C403.2.9 AND SPECIFICATION SECTION 23 07 00.
13. INSULATION EXPOSED TO WEATHER SHALL BE PROTECTED FROM DAMAGE, SUNLIGHT, MOISTURE AND WIND. PROVIDE JACKET AND ALUMINUM COVERS. ADHESIVE TAPE IS NOT PERMITTED.
14. SINGLE FAN OR MULTIPLE FANS IN PARALLEL WITH COMBINED MOTOR NAMEPLATE OVER 5HP SHALL HAVE A FAN EFFICIENCY GRADE (FEG) OF 67 OR HIGHER AND SHALL BE SELECTED TO OPERATE WITHIN 15% OF THE MAXIMUM TOTAL EFFICIENCY OF THE FAN.
15. COOLING SYSTEMS 65 MBH AND GREATER SHALL HAVE TWO SPEED FAN CONTROL OR MODULATING FAN CONTROL.
16. FAN AND PUMP MOTORS 7.5 HP AND GREATER SHALL BE PROVIDED WITH A VFD.
17. ECONOMIZERS SHALL BE INTEGRATED WITH MECHANICAL COOLING AND SHALL BE CAPABLE OF PROVIDING PARTIAL ECONOMIZER COOLING EVEN WHEN ADDITIONAL MECHANICAL COOLING IS REQUIRED.
18. AIR ECONOMIZERS SHALL HAVE FIXED DRY-BULB HIGH-LIMIT SHUTOFF CONTROL NOT TO EXCEED 75 DEG. F.
19. ALL ELECTRIC MOTORS SHALL MEET THE EFFICIENCY REQUIREMENTS OF TABLES C405.8(1) THROUGH C405.8(4).
20. FAN MOTORS 1/12 HP UP TO 1 HP SHALL BE ECM.
21. PROVIDE A MEANS OF BALANCING EVERY AIR INLET AND OUTLET AND EVERY AIR OR WATER TERMINAL DEVICE.
22. ALL PIPE AND DUCT INSULATION SHALL BE LABELLED WITH ITS THICKNESS AND INSULATING VALUE (R OR K).
23. PROVIDE CLOSE OUT DOCUMENTATION INCLUDING RECORD DOCUMENTS, OPERATIONS AND MAINTENANCE INFORMATION AND OWNER TRAINING.

DIFFUSER AND GRILLE SCHEDULE

ITEM	MAKE	MODEL	DESCRIPTION	SIZE	MARK
SUPPLY	TITUS	MCD	SQUARE FACE/NECK, SURFACE	6"X6"	D-1
DIFFUSER	PRICE	SMCD	MOUNT FRAME SIZE OR 24"X24"	8"X8"	D-2
			LAY-IN. SIDE INLET PLENUM PER	10"X10"	D-3
			PLANS. 4 ADJ. CORES, STEEL,	12"X12"	D-4
			WHITE ENAMEL		
RETURN	TITUS	50F	1/2" EGG CRATE, ALUM.,	12"X24"	G-1
GRILLE	PRICE	80	WHITE ENAMEL	24"X24"	G-2
				8"X8"	G-3

NOTES:

1. CEILING UNIT FRAME SHALL BE COMPATIBLE WITH CEILINGS; FLAT FRAME SURFACE MOUNT (TITUS BORDER TYPE 1) FOR DRYWALL CEILINGS AND WITH LAY-IN PANEL FOR EXPOSED GRID CEILINGS (TITUS BORDER TYPE 3). SEE ARCHITECTURAL PLANS FOR CEILING TYPES.
2. BEVELED DROP FACE DIFFUSERS (TITUS BORDER TYPE 6) ARE NOT ACCEPTABLE.
3. SIZE INDICATES DUCT COLLAR.

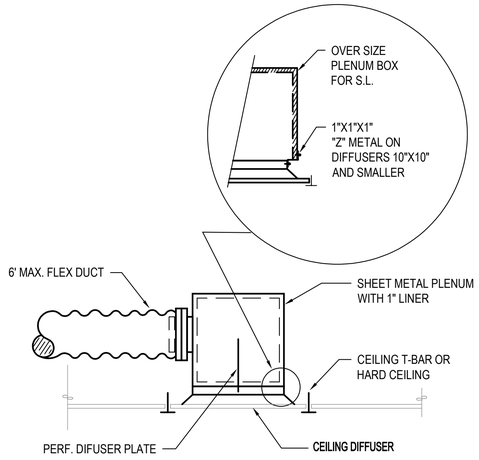

OPTION 1: FOR RECTANGULAR OR ROUND DIFFUSER COLLARS

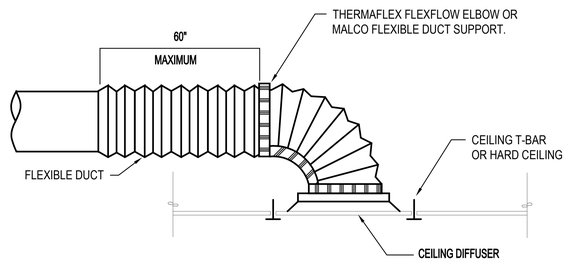

OPTION 2: FOR ROUND DIFFUSER COLLARS ONLY (SPACE PERMITTING)

NOTES:

1. SEE ARCHITECTURAL PLANS FOR CEILING TYPES.
2. SUPPLY SHOWN, DETAIL WITHOUT PERF PLATE IS TYPICAL FOR CEILING RETURN OR EXHAUST GRILLE INSTALLATION.

TYPICAL DIFFUSER DETAIL CEILING INSTALLATION

1 / M002

N.T.S.

SIDER+BYERS
MECHANICAL + ELECTRICAL ENGINEERS
150 Nickerson, Suite #305
Seattle, Washington 98109
Phone: 206.285.2966

SMR ARCHITECTS
SMR Architects
117 S. Main St., Suite 400
Seattle, WA 98104
PH: 206.623.1104
FX: 206.623.5285

MULTI-SERVICE CENTER OFFICE & CLOTHING CLOSET

1200 SOUTH 336TH STREET
FEDERAL WAY, WA 98003

JON SHAFER — STATE OF WASHINGTON — 47106 — REGISTERED PROFESSIONAL ENGINEER

ISSUED SETS

DATE	DESCRIPTION
08/27/26	MECHANICAL PERMIT AND CONSTRUCTION SET

REVISIONS / NOTES

NO	DATE	DESCRIPTION

AHJ STAMP

TITLE

NOTES

DRAWN	JS
CHECKED	JS
ISSUE DATE	08/27/26
PROJECT #	26023
SHEET #	

M002

7/16/2026 4:34:31 PM

SECTION 23 00 00 - HVAC GENERAL CONDITIONS

PART 1 GENERAL

1.1 GENERAL REQUIREMENTS

A. Conform to General Conditions, Supplementary Conditions, the modifications thereto and Division 01 - General Requirements for all work in Division 23.

A. Provide labor, materials and appliances necessary for satisfactory installation of mechanical work ready to operate in strict accordance with these specifications and drawings.

1.2 PERFORMANCE REQUIREMENTS

A. Firestopping: Conform to International Building Code with local amendments, FM, and UL for fire resistance ratings and surface burning characteristics.

1.3 SUBMITTALS

A. Provide one electronic copy of product data submittals for all products listed under "Part 2 Products" of Division 23 and all additional products noted on drawings or required for completion of sequence of operations.

B. Electronic: **All sections of Division 23 shall be submitted together in one complete PDF file with bookmarks for each section. Multi-part submittals will be returned without review.**
1. First Page: Name of Project, Owner, Location & Contracting Company.
2. Index Page: List of specification sections with contents by Tag or Item.
3. Bookmarks: Electronic bookmark of each specification section corresponding to listing in index.

C. Do no ordering, fabrication or manufacturing of products until return of approved submittals.

1.4 HVAC PERMIT

A. HVAC contractor shall prepare all documents for mechanical permit application, submit for, and obtain the permit. HVAC Contractor shall pay all costs and fees to obtain the permit.

B. Contractor shall not commence work until permit is obtained. Contractor is solely responsible to ensure that the permit application and any revisions are submitted in a timely manner so as not to impact project schedule.

C. Contractor shall retain services of a third-party structural engineer to provide support, anchoring and seismic calculations for all applicable equipment.

1.5 QUALIFICATIONS

A. Manufacturer: Company specializing in manufacturing products specified in this section with minimum three years' experience.

B. Installer: Company specializing in performing Work of this section with minimum three years' experience.

1.6 COORDINATION

A. Visit the site and become familiar with existing conditions affecting work.

B. HVAC drawings are diagrammatic and do not indicate all possible site conditions. The contractor shall verify all measurements, dimensions and connections on site and coordinate between trades to preclude interferences. The contractor shall provide adjustments to piping or ductwork as necessary to fit conditions including but is not limited to relocation, offsets, and transitions.

C. In the event of a conflict with other trades of work, the following priority from highest to lowest shall be followed: Structural, lighting, HVAC, plumbing/piping and sprinklers. Starting with the lowest priority, the HVAC, plumbing, and sprinkler contractors shall provide whatever materials, offsets, labor etc. is required to resolve the conflict.

1.7 ELECTRICAL

A. Power Wiring: By Electrical Contractor.

B. Control Wiring: Responsibility of Division 23, including all line and low voltage control wiring. Owner will not entertain additional cost due to lack of coordination between HVAC Contractor and Electrical Contractor.

1.8 TESTING

A. Perform testing and balancing of HVAC systems as described in this Division and as required by applicable codes and ordinances.

1.9 WARRANTIES AND CONTRACTOR'S GUARANTEE

A. All work, material and equipment shall be free of defect, complete and in perfect operating order at time of delivery to Owner.

B. Furnish one year warranty from date of substantial completion for all systems unless specifically noted otherwise.

C. Without cost to Owner, **correct all defects and failures discovered within one year from date of final acceptance**, except when in the opinion of the Architect a failure is due to neglect or carelessness of the Owner.

D. The presence of any inspector or observer during any construction does not relieve the Contractor from responsibility for defects discovered after completion of the work.

END OF SECTION

SECTION 23 05 00 - COMMON WORK RESULTS FOR HVAC

PART 1 GENERAL

1.1 GENERAL REQUIREMENTS

A. Comply with requirements and recommmendations of Sheetmetal and Air Conditioning Contractors National Association (SMACNA) HVAC Duct Construction Standards.

B. Conform to requirements of IBC 1613 and SMACNA "Seismic Restraint Manual Guidelines for Mechanical Systems".

1.2 REQUIREMENTS

A. Firestopping Materials: Provide to achieve fire ratings as noted on architect's drawings for adjacent construction, but not less than 1 hour fire rating. ASTM and UL.
1. Ratings may be 3-hours for firestopping in through-penetrations of 4-hour fire rated assemblies unless otherwise required by applicable codes.
2. Surface Burning: UL 723 with maximum flame spread / smoke developed rating of 25/50.
3. Firestop interruptions to fire rated assemblies, materials, and components.

B. Firestop interruptions to fire rated assemblies, materials and components.

1.3 QUALITY ASSURANCE

A. Installed products shall have surface Burning Characteristics: 25/50 flame spread/smoke developed index when tested in accordance with ASTM E84.

PART 2 PRODUCTS

2.1 DUCT HANGERS AND SUPPORTS

A. Hanger straps and rods shall be in accord with SMACNA Duct Construction Standards.

B. Fasten bracing to ductwork, including riveting, bolting, and tack welding per SMACNA.

C. Provide galvanized steel band or fabricated angle iron brackets for wall supports.

D. Hanger Rods: Carbon Steel, with hex nuts and flat washers.

2.2 HANGER ACCESSORIES

A. Hanger Rods: Mild steel threaded both ends, threaded on one end, or continuous threaded.

2.3 FORMED STEEL CHANNEL

A. Manufacturers: Allied Tube & Conduit, B-Line Systems, Unistrut or approved equal.

B. Product Description: Galvanized 12 gage thick steel, with holes 1-1/2 inches on center.

2.4 FIRESTOPPING-APPLIED

A. Manufacturers: RectorSeal, Dow Corning, 3M Fire Protection or approved equal.

B. General:
1. Fire stopping materials shall conform to Flame (F) and Temperature (T) ratings as required by applicable building codes and tested by nationally accepted test agencies per ASTM E 814 or UL 1479 fire tests for through penetrations, and ASTM E 1966 or UL 2079 for construction joints, and UL 2307 for perimeter edge joints.
2. Fire stopping material shall be free of asbestos, PCBs, ethylene glycol, and lead.
3. Do not use any product containing solvents or that requires hazardous waste disposal.
4. Fire stopping shall be performed by a contractor trained or approved by firestop manufacturer.
5. Select products with rating not less than rating of wall or floor being penetrated.

C. Single Source Responsibility: Provide firestop systems for all conditions from a single supplier.

D. Product Description: Provide Latex caulk/sealant, Silicone caulk/sealant, Intumescent Wrap Strip, Firestop Putty, Firestop Collar or Intumescent Sleeve to meet each specific application and performance requirement.

E. Primer: Type recommended by firestopping manufacturer for specific substrate surfaces and suitable for required fire ratings.

F. Installation Accessories: Provide clips, collars, fasteners, temporary stops or dams, and other devices required to position and retain materials in place.
1. Forming/Damming Materials: Mineral fiberboard, backer rod or other type recommended by Manufacturer's tested system.

2.5 PENETRATIONS OF NON-RATED SURFACES

A. Stamped steel, chrome plated, hinged, split ring escutcheons or floor plates or ceiling plates for covering openings in occupied areas where piping is exposed.

2.6 PAINT

A. Ductwork: Paint interior of ductwork visible through grilles and diffusers with a flat black paint. Prepare and paint surfaces in accord with Division 9.

2.7 SEISMIC SUPPORTS

A. Provide seismic support as required by IBC 1613 and local authorities.

B. Sway bracing for ductwork, piping, and equipment shall consist of steel angles, rods or pipes. Shapes, lengths and methods of attachment shall be in accord with SMACNA "Guidelines for Seismic Restraints of Mechanical Systems".

PART 3 EXECUTION

3.1 EXISTING WORK

A. Provide access to existing piping, ductwork, equipment and other installations remaining active and requiring access.

B. Extend existing ductwork installations using materials and methods compatible with existing installations.

3.2 SURFACE PREPARATION

A. Obtain permission from Architect/Engineer before drilling or cutting structural members.

3.3 INSTALLATION – DUCTWORK

A. Locate hangers, supports and accessories to handle loads imposed by ductwork, and air distribution devices and with maximum spacing noted.

B. Support all ductwork to prevent sag, undue play and swing.

C. Maximum support spacing per SMACNA standards. Spacing shall not exceed 10 feet.

3.4 INSTALLATION – FIRESTOPPING AND SEALS AT PARTITIONS

A. Installation of Firestop shall be performed by either a specialty contractor specializing in firestop application (FM G 4991 or UL Qualified Firestop Contractor), or general or sub-contractors with experience in similar applications and projects with installers qualified, trained, and certified by the firestop manufacturer. Installation shall be performed in strict accordance with manufacturer's detailed installation procedures.

B. Install material at fire rated construction perimeters and openings containing penetrating sleeves, piping, ductwork, and other items, requiring firestopping.

C. Apply primer where recommended by manufacturer for type of firestopping material and substrate involved, and as required for compliance with required fire ratings.

D. Apply firestopping material in sufficient thickness to achieve required fire and smoke rating, to uniform density and texture.

E. Place foamed material in layers to ensure homogenous density, filling cavities and spaces. Place sealant to completely seal junctions with adjacent dissimilar materials.

F. Place intumescent coating in sufficient coats to achieve rating required.

G. Clean adjacent surfaces of firestopping materials.

H. Seal openings at surface as follows:
1. Install sleeve through opening and extending beyond minimum of 1 inch on both sides of building element.
2. Size sleeve allowing minimum of 1 inch void between sleeve and building element.
3. Pack void with backing material.
4. Seal ends of sleeve with UL listed fire resistive silicone compound to meet fire rating of structure penetrated.

3.5 INSTALLATION - PENETRATIONS OF NON-RATED SURFACES

A. Seal opening through non-fire rated wall, partition, floor, ceiling, and/or roof opening as follows:
1. Install sleeve through opening and extending beyond minimum of 1 inch on both sides of building element.
2. Size sleeve allowing minimum of 1 inch void between sleeve and building element.

B. Install escutcheons where piping penetrates non-fire rated surfaces in occupied spaces.

C. Exterior wall openings below grade: Assemble rubber links of mechanical sealing device to size of piping and tighten in place, in accordance with manufacturer's instructions.

D. Interior partitions: Seal pipe penetrations air tight. Apply sealant to both sides of penetration to completely fill annular space between sleeve and conduit.

3.6 CLEANING

A. Contractor shall make all mechanical components free of dust and dirt prior to startup.

3.7 PROTECTION OF FINISHED WORK

A. Protect adjacent surfaces from damage by material installation.

END OF SECTION

SECTION 23 05 93 - TESTING, ADJUSTING, AND BALANCING

PART 1 GENERAL

1.1 SCOPE

A. Testing, adjusting and balancing of air systems.

B. Measurement of final operating conditions of above systems.

C. Duct pressure (leakage) testing as required by 23 31 00.

D. Preparation of formal report.

1.2 PERFORMANCE CRITERIA

A. Work shall be performed by approved independent testing and balancing agency.

B. Perform testing and balancing in accordance with Associated Air Balance Council (AABC) or National Environmental Balancing Bureau (NEBB). All work shall be supervised.

C. Calibrate instruments used for testing and balancing within a period of six months of start of work.

1.3 SUBMITTAL

A. Provide three copies of updated and/or corrected report for Final Commissioning Report.

1.4 FORMAT

A. Report shall consist of test sheets similar to AABC Standard Forms for Diffusers and Grilles, Air Handling Equipment,

B. Report shall include the following.
1. Preface suggesting abnormalities and problems encountered.
2. Instrumentation List including type, model, manufacturer, serial number, and calibration dates.
3. System Identification reporting location of equipment, zones, supply, return, and exhaust openings.
4. Record following for each piece of air handling equipment.
a. Manufacturer, model number, and serial number.
b. Design and manufacturer rated data.
c. Actual CFM
d. Suction and discharge static pressure of each fan.
e. Outside-air and return-air total CFM.
f. Actual operating current, voltage, and brake horsepower of each fan motor.
g. Static-pressure controls final operating set points.

1.5 QUALIFICATIONS

A. Work of this section shall be performed by independent Air Testing and Balance Agency specializing in testing and balancing of heating, ventilating, and cooling systems to balance, adjust, and test air moving equipment, air distribution, and exhaust systems.

B. Agency shall provide proof of having successfully completed at least five years of specialized experience in air system balancing. Work by this Agency shall be done under direct supervision of qualified heating and ventilating engineer employed by Agency.

PART 2 EXECUTION

2.1 EXAMINATION

A. Verify systems are complete and in good working order before commencing work. Then, put all systems and equipment into operation and continue operation until all adjusting, balancing, testing, demonstrations, instructions and cleaning of systems have been completed. Verify the following:
1. Systems are started and operating in safe and normal condition.
2. Temperature control systems are installed complete and operable.
3. Proper thermal overload protection is in place for electrical equipment.
4. Final filters are clean and in place.
5. Duct systems are clean of debris.
6. Fans are rotating correctly.
7. Fire and volume dampers are in place and open.
8. Air coil fins are cleaned and combed.
9. Access doors are closed and duct end caps are in place.
10. Air outlets are installed and connected.
11. Duct system leakage is minimized.

2.2 INSTALLATION TOLERANCES

A. Diffuser, register and grille air flow rates shall be measured and adjusted to deliver final flow rates within 10% and within 50 cfm of design rates, whichever is less.

B. Fan air flow rates shall be measured and adjusted to deliver final flow rates within 10% and within 100 cfm of design rates, whichever is less.

2.3 ADJUSTING

A. Ensure that clean filters, of the type specified, are installed prior to air balancing.

B. Set minimum position of motorized dampers for scheduled minimum outside air.

C. Verify recorded data represents actual measured or observed conditions.

D. Permanently mark settings of valves, dampers, and other adjustment devices allowing settings to be restored. Set and lock memory stops.

E. After adjustment, take measurements to verify balance has not been disrupted. If disrupted, verify correcting adjustments have been made.

F. Report defects and deficiencies noted during performance of services, preventing system balance.

G. Leave systems in proper working order, replacing belt guards, closing access doors, closing doors to electrical switch boxes, and restoring thermostats to specified settings.

2.4 AIR SYSTEM PROCEDURE

A. Perform soloing testing and balancing functions in accordance with Associates Air Balance Council National Standards.

B. Adjust air handling and air distribution systems to obtain design supply, return, and/or exhaust air quantities.
1. Test and adjust total system CFM by adjustment of fan speeds. Provide sheave drive changes as necessary.
2. Perform tests at high and low speeds of variable speed systems.
3. Adjust branch air quantities by damper regulation. Multi-diffuser branch ducts shall have at least one outlet or inlet volume damper completely open to minimize throttling losses.
4. Make air quantity measurements in main ducts and for outside air by Pitot tube traverse of entire cross sectional area of duct.
5. Measure air quantities at air inlets and outlets.

C. Diffusers, Registers and Grilles:
1. Adjust air distribution to obtain uniform space temperatures free from objectionable drafts.
2. Use volume control devices to regulate air quantities only to the extent that the adjustments do not create objectionable air motion or sound levels.
3. Effect volume control by using volume dampers located in ducts.

D. Provide system schematic:
1. Identify the location and area of each grille, diffuser, register, and terminal box.
2. Record the required and actual air quantities at each outlet or inlet.
3. Record size, type, and manufacturer of each diffuser, grille, and register on air outlet data sheets.

E. Pressure:
1. Measure static pressure conditions on air units, including filter and coil pressure drops, and total pressure across fan with suction and discharge pressures.
2. Make air balancing allowances for 50 percent loading of filters.

3. Measure building static pressure.

F. Electrical:
1. Record nameplate motor current and voltage.
2. Measure actual motor current and voltage at balanced condition.

G. Dampers:
1. Adjust outside air, return air, and exhaust dampers for design conditions.
2. At modulating damper locations, take measurements and balance at extreme conditions.

H. Smoke testing, or some other approved means, may be required to determine leak locations if air balance report indicated that any system's CFM total is less than 10 percent of design CFM. Prior to test, verify that system's duct joints have been sealed as specified and that air moving device in question is supplying required design system air flow. Architect will approve test method required. If smoke test is selected, use following procedure. Provide necessary precautions to protect those performing or observing test from being exposed to smoke.
1. Use zinc chloride smoke candles, titanium tetrachloride ampules or sticks, or other devices acceptable to Architect to generate smoke.
2. Close openings in duct except for one opening at farthest end of duct run.
3. If re-balancing is required, submit revised air test and balance reports to Architect before Substantial Completion.
4. Spot balance and rebalance shall be performed at no additional cost to Owner.

END OF SECTION

SIDER+BYERS
MECHANICAL + ELECTRICAL ENGINEERS
150 Nickerson, Suite #305
Seattle, Washington 98109
Phone: 206.285.2966

SMR ARCHITECTS
SMR Architects
117 S. Main St., Suite 400
Seattle, WA 98104
PH: 206.623.1104
FX: 206.623.5285

MULTI-SERVICE CENTER OFFICE & CLOTHING CLOSET

1200 SOUTH 336TH STREET
FEDERAL WAY, WA 98003

JON SHAFER
STATE OF WASHINGTON
47106
REGISTERED
PROFESSIONAL ENGINEER

ISSUED SETS

DATE	DESCRIPTION
08/27/26	MECHANICAL PERMIT AND CONSTRUCTION SET

REVISIONS / NOTES

NO	DATE	DESCRIPTION

AHJ STAMP

TITLE

SPECIFICATION

DRAWN	JS
CHECKED	JS
ISSUE DATE	08/27/26
PROJECT #	26023
SHEET #	

M003

7/16/2026 4:34:31 PM

SECTION 23 07 00 – HVAC INSULATION

PART 1 GENERAL

1.1 QUALITY ASSURANCE

A. Insulation must have maximum flame spread index of 25 and maximum smoke developed index of not exceeding 50 in accordance with ASTM E84.
B. All ductwork systems shall be insulated to conform with the Washington State Energy Code and (as minimum) and this section.

1.2 IDENTIFICATION

A. Insulation shall bear a manufacturer's mark indicating the product R-value, or K-value and thickness. This mark shall be visible after installation and shall be repeated at an interval of no greater than 10 feet.

PART 2 PRODUCTS

2.1 GLASS FIBER DUCT WRAP

A. Manufacturers: Johns Manville Microlite XG 75 or equal by Owens-Corning, Knauf, Manson or approved equal.
B. Description: Formaldehyde-free, flame-attenuated glass fibers bonded with thermosetting acrylic resin, FSK facing.
1. ASTM E84, UL 723
2. Installed R Value: 1-1/2" R-4.2, 2" R-5.6, 2.5" R-6, 3" R-8.3, 4.5" R-12, 5.75" R-16.
3. Maximum Service Temperature: 250 degrees F.
4. Density: 0.75 lb/cu ft

C. Vapor Retarder Jacket: Reinforced FSK facing. Seal with pressure sensitive 2" tape.
D. Identification: At intervals not greater than 36" print the name of manufacturer, the thermal resistance R-value at insulation thickness, the flame spread and smoke developed indexes.

PART 3 EXECUTION

3.1 EXAMINATION

A. Verify surfaces are clean and dry, with foreign material removed.

3.2 INSTALLATION

A. Provide continuous insulation through penetrations of building assemblies or portions of assemblies having fire resistance rating of one hour or less. Provide intumescent firestopping when continuing insulation through assembly. Finish at supports, protrusions, and interruptions.
B. Apply insulation close to equipment by grooving, scoring, and beveling insulation. Fasten insulation to equipment with studs, pins, clips, adhesive, wires, or bands.
C. Fill joints, cracks, seams, and depressions with bedding compound to form smooth surface. On cold equipment, use vapor retarder cement.
D. Finish insulation at supports, protrusions, and interruptions.
E. Nameplates and ASME Stamps: Bevel and seal insulation around; do not insulate over.
F. For all insulated ductwork:
1. Provide insulation with vapor retarder jackets.
2. Finish with tape and vapor retarder jacket.
3. Continue insulation through walls, sleeves, hangers, and other duct penetrations.
4. Insulate entire system including fittings, joints, flanges, fire dampers, flexible connections, and expansion joints.

G. Ductwork: Provide on ductwork as listed below. Insulation thickness is provided as reference; each application must meet minimum installed R-Value.

Service	Location	Insulation Type	Approx. Thickness	Min. Installed R-Value	Jacket
Supply, Return	Attic, crawlspace, parking garage or uninsulated area within building.	Duct Wrap	3"	R-8	FSK

1. Secure duct wrap with mechanical fasteners spaced 12" on center, minimum. For horizontal ducts 24" or more in width, duct wrap shall also be secured with mechanical fasteners spaced 18" on center, on centerline of bottom of duct.

END OF SECTION

SECTION 23 31 00 - HVAC DUCTS AND CASINGS

PART 1 GENERAL

1.1 PERFORMANCE REQUIREMENTS

A. Variation of duct configuration or sizes other than those of equivalent or lower loss coefficient is not permitted except by written permission. Size round ducts installed in place of rectangular ducts in accordance with ASHRAE table of equivalent rectangular and round ducts.

B. Standards: Comply with most stringent requirements and recommendations of International Mechanical Code or SMACNA (Sheet Metal and Air Conditioning Contractors National Association) Duct Construction Standards for fabrication, construction and sealant of duct, fittings, and accessories.

C. Construct ductwork to NFPA 90A.

PART 2 PRODUCTS

2.1 DUCT MATERIALS

A. Galvanized Steel Ducts: ASTM A653 galvanized steel sheet, lock-forming quality, having G60 zinc coating of in conformance with ASTM A90.

B. Fasteners: Rivets, bolts, or sheet metal screws.

C. Hanger Rod: ASTM A36; steel, galvanized; threaded both ends, threaded one end, or continuously threaded.

2.2 INSULATED FLEXIBLE DUCTS [GRD CONNECTION]

A. Manufacturers: Thermaflex G-KM or approved equal.

B. Product Description: Black polymer film supported by helical-wound spring steel wire; fiberglass insulation; polyethylene vapor barrier film, UL 181 Class 1 complying with NFPA 90A & 90B.
1. Pressure Rating: 6 inches wg positive and 1 inches wg negative.
2. Maximum Velocity: 5000 fpm.
3. Temperature Range: -20 degrees F to 250 degrees F.
4. Thermal Resistance: R-4.2

C. Accessories:
1. Hanger Strap: Thermaflex FlexTie – 1-1/2" wide, adjustable, plenum rated.
2. Elbow: Thermaflex FlexFlow Elbow or Malco flexible duct support – One-piece adjustable design installs over flex duct.

2.3 SINGLE WALL SPIRAL ROUND DUCTS

A. Manufacturers: McGill AirFlow, Semco or approved equal.

B. Product Description: UL 181, Class 1, round spiral lockseam duct constructed of galvanized steel.

C. Elbows: Smooth radius or 5 section, 1.5D.

D. Construct duct with the following minimum gages:

Diameter	Gauge
3 inches to 14 inches	26
15 inches to 26 inches	24

E. Construct fittings with the following minimum gages:

Diameter	Gauge
3 inches to 14 inches	24
15 inches to 26 inches	22

2.4 DUCT SEALANT

A. Manufacturer: Design Polymerics, United McGill, Hardcast or approved equal.

B. Sealant shall be water based and formulated to withstand working temperatures of -25°F to +200°F. All sealants shall exceed 500 hours under ASTM C 732 (artificial weathering) and pass ASTM C 734 (low temperature flexibility after artificial weathering). All sealants shall be of an elastomeric nature, have a weight per gallon not to exceed 12.5, have solids by weight of 66% ± 2%, pass UL 723 with a flame spread of 5 and smoke developed of 5.

2.5 DUCTWORK FABRICATION

A. Fabricate and support rectangular and round ducts in accordance with SMACNA HVAC Duct Construction Standards - Metal and Flexible. Provide duct material, gages, reinforcing, and sealing for operating pressures corresponding to the ESP (external static pressure) of the fan system. i.e. Ductwork for a fan with and ESP of 0.75" w.g. should be constructed per SMACNA 1" w.g. pressure standard.

B. Construct T's, bends, and elbows with minimum radius 1-1/2 times centerline duct width. Where not possible and where rectangular elbows are used, provide airfoil turning vanes. Where acoustical lining is indicated, furnish turning vanes of perforated metal with glass fiber insulation.

C. Indicated dimensions on drawings are net inside. Allow for thickness of duct lining where indicated.

D. Increase duct sizes gradually, not exceeding 15 degrees divergence wherever possible; maximum 30 degrees divergence upstream of equipment and 45 degrees convergence downstream.

E. Provide standard 45-degree lateral wye takeoffs. When space does not allow 45-degree lateral wye takeoff, use 90-degree conical tee connections.

PART 3 EXECUTION

3.1 EXAMINATION

A. Verify sizes of equipment connections before fabricating transitions.

3.2 INSTALLATION

A. Make field measurements to establish locations of hangers and supports where installation will not damage building construction.

B. During construction, install temporary closures of metal or taped polyethylene on open ductwork to prevent construction dust from entering ductwork system.

C. Where ducts pass through partitions, ceilings or floors, Provide 1" clearance and insulate from structure with insulation material. Provide flanged sheet metal closure.

D. Where ducts pass through rated walls or assemblies without fire dampers, provide ¼" to 1" annular space and fill with firestop sealant. Ductwork shall be minimum 26 gauge metal.

E. Drawings do not attempt to show all offsets in ductwork. Make such offsets as necessary for installation of work without additional cost to Owner. 15 degree maximum angle of offset.

F. Flexible Duct:
1. Install insulated flexible duct in full extended condition free of sags and kinks.
2. Use minimum length required to make connection.
3. Length shall not exceed 10 feet.
4. Supported on 36" centers with minimum 1-1/2" wide strap. Do not crush.
5. Connect flexible ducts to metal ducts with draw bands.

G. Install duct hangers and supports in accordance with Section 23 05 00.

H. Use double nuts and lock washers on threaded rod supports.

3.3 SEISMIC BRACING

A. See 23 05 00.

3.4 DUCT SEALING

A. Install and seal ducts in accordance with SMACNA HVAC Duct Construction Standards - Metal and Flexible. Ductwork shall be sealed using welds, gaskets, or mastic. Duct tape is not permitted as a sealant on any ducts with the exception of that on fiberglass ducts specifically made for such use.

B. For all ductwork seal all transverse joints and longitudinal seams. For 2" w.g. and higher pressure class ductwork also seal all duct wall penetrations (i.e. screw, fastener, rod or wire).

C. Low pressure ductwork (less than 3" w.g.) shall be sealed to a leakage rate not to exceed 6 percent of the system airflow. All deficient ductwork shall be re-sealed until compliant.

3.5 PRESSURE (DUCT LEAKAGE) TESTING

A. Perform duct leakage rate testing in accordance with SMACNA Duct Leakage Test Procedures for the following.
1. All ductwork regardless of pressure class located exterior of the building or in an unconditioned space shall have a leakage rate of less than 6%.
2. At least 25% of all ductwork with a pressure class of 3" w.g. or more. The maximum duct leakage (CL) shall be 4.0 per Energy Code C403.2.8.3.3.

B. All ductwork found deficient by testing shall be resealed and retested until leakage compliance is reached.

C. Provide written documentation of testing to be included with the Test and Balance report, see 23 05 93. Include drawing(s) indicating where test measurements were taken.

3.6 CLEANING

A. Clean duct system and force air at high velocity through duct to remove accumulated dust. To obtain sufficient air flow, clean one half of system completely before proceeding to other half. Protect equipment with potential to be harmed by excessive dirt with temporary filters, or bypass during cleaning.

END OF SECTION

SECTION 23 33 00 - AIR DUCT ACCESSORIES

PART 1 GENERAL

PART 2 PRODUCTS

2.1 MANUAL BALANCING DAMPERS

A. Manufacturers: Ruskin, Greenheck, Pottorff or approved equal
B. Frames: Galvanized steel, minimum 20 gage.
C. Blades: Galvanized steel, minimum 20 gage, attached to minimum 3/8 inch shafts with locking handle quadrant. Provide 2" standoff for insulated ductwork applications.
D. Maximum Velocity: 1500 fpm.
E. Round: Ruskin MDRS25 or equal.

2.2 DUCT-MOUNTED SMOKE DETECTORS

A. Duct-mounted smoke detectors shall be ionization type smoke detectors and UL listed for use in air handling systems. Detectors shall comply with NFPA 90A. They shall contain an ionization type detector which samples the width of the air duct and contacts for interface with the fire alarm system.

PART 3 EXECUTION

3.1 INSTALLATION.

A. Install in accordance with NFPA 90A, and follow SMACNA HVAC Duct Construction Standards - Metal and Flexible. Refer to Section 23 31 00 for duct construction and pressure class.
B. Install remote operated dampers for balancing where damper is located in an inaccessible location.
C. Install temporary duct test holes as required for testing and balancing purposes. Cut or drill in ducts. Cap with neat patches, neoprene plugs, threaded plugs, or threaded or twist-on metal caps.

3.2 SMOKE DETECTORS

A. Smoke detectors shall be installed in the main return-air duct, up-stream of the filters. Detectors shall shut down air handling equipment upon activation and shall be installed at all air handling equipment delivering 2000 CFM or more. Smoke detectors shall be hard-wired so that the fan stops independently of the HVAC control system.
B. Duct smoke detectors shall be connected to the building's fire alarm control panel as a supervisory signal. Duct detectors shall not activate a fire alarm signal.

END OF SECTION

SIDER+BYERS
MECHANICAL + ELECTRICAL ENGINEERS
150 Nickerson, Suite #305
Seattle, Washington 98109
Phone: 206.285.2966

SMR ARCHITECTS
SMR Architects
117 S. Main St., Suite 400
Seattle, WA 98104
PH: 206.623.1104
FX: 206.623.5285

MULTI-SERVICE CENTER OFFICE & CLOTHING CLOSET

1200 SOUTH 336TH STREET
FEDERAL WAY, WA 98003

JON SHAFER STATE OF WASHINGTON 47106 REGISTERED PROFESSIONAL ENGINEER

ISSUED SETS

DATE	DESCRIPTION
08/27/26	MECHANICAL PERMIT AND CONSTRUCTION SET

REVISIONS / NOTES

NO	DATE	DESCRIPTION

AHJ STAMP

TITLE

SPECIFICATION

DRAWN	JS
CHECKED	JS
ISSUE DATE	08/27/26
PROJECT #	26023
SHEET #	

M004

7/16/2026 4:34:31 PM

SIDER+BYERS
MECHANICAL + ELECTRICAL ENGINEERS
150 Nickerson, Suite #305
Seattle, Washington 98109
Phone: 206.285.2966

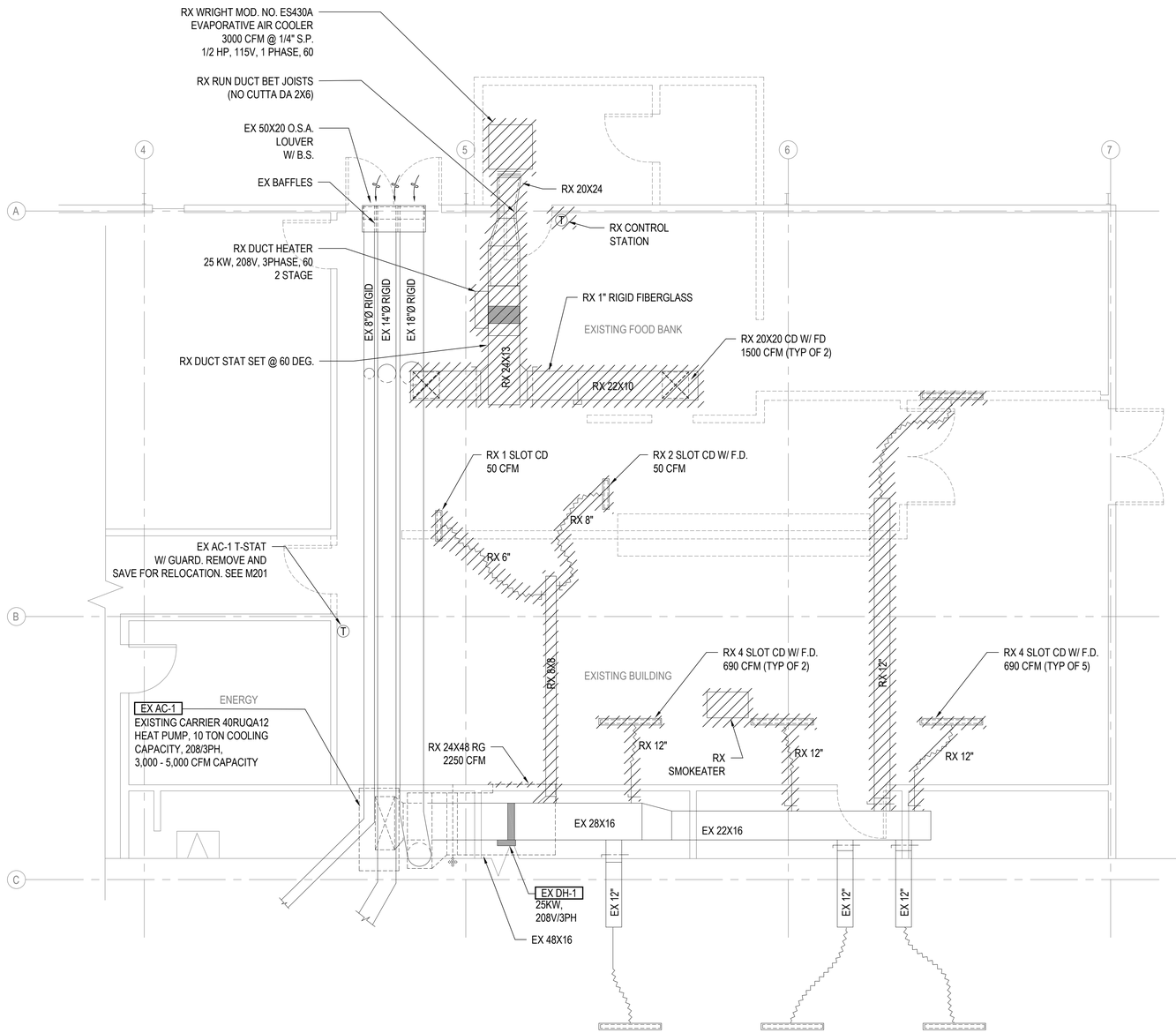

DEMOLITION OFFICE & CLOTHING CLOSET

SCALE: 1/4"=1'-0"

SMR ARCHITECTS
SMR Architects
117 S. Main St., Suite 400
Seattle, WA 98104
PH: 206.623.1104
FX: 206.623.5285

MULTI-SERVICE CENTER OFFICE & CLOTHING CLOSET

1200 SOUTH 336TH STREET
FEDERAL WAY, WA 98003

JON SHAFER
STATE OF WASHINGTON
47106
REGISTERED PROFESSIONAL ENGINEER

ISSUED SETS

DATE	DESCRIPTION
08/27/26	MECHANICAL PERMIT AND CONSTRUCTION SET

REVISIONS / NOTES

NO	DATE	DESCRIPTION

AHJ STAMP

TITLE

OFFICE & CLOTHING CLOSET - DEMO

DRAWN	JS
CHECKED	JS
ISSUE DATE	08/27/26
PROJECT #	26023
SHEET #	M101

7/16/2026 4:34:31 PM

SIDER+BYERS
MECHANICAL + ELECTRICAL ENGINEERS
150 Nickerson, Suite #305
Seattle, Washington 98109
Phone: 206.285.2966

SMR ARCHITECTS
SMR Architects
117 S. Main St., Suite 400
Seattle, WA 98104

PH: 206.623.1104
FX: 206.623.5285

MULTI-SERVICE CENTER OFFICE & CLOTHING CLOSET

1200 SOUTH 336TH STREET
FEDERAL WAY, WA 98003

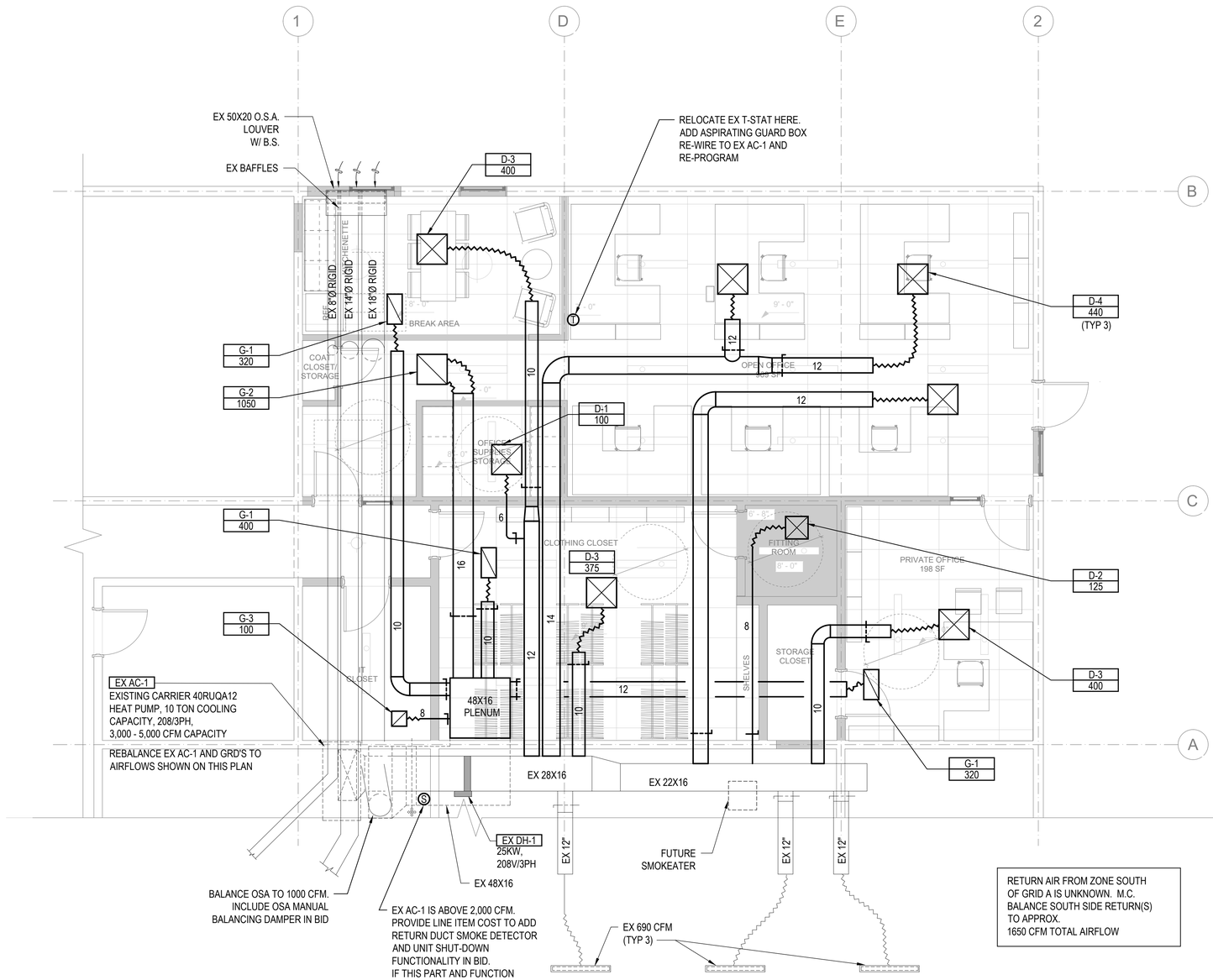

OFFICE & CLOTHING CLOSET
SCALE: 1/4"=1'-0"

GENERAL NOTES:

INSULATE ALL NEW SUPPLY AND RETURN DUCTWORK PER SPECIFICATION

ISSUED SETS

DATE	DESCRIPTION
08/27/26	MECHANICAL PERMIT AND CONSTRUCTION SET

REVISIONS / NOTES

NO	DATE	DESCRIPTION

AHJ STAMP

TITLE

OFFICE & CLOTHING CLOSET - NEW

DRAWN	JS
CHECKED	JS
ISSUE DATE	08/27/26
PROJECT #	26023
SHEET #	

M201

7/16/2026 4:34:31 PM